9 Wind Turbine Control

The previous chapters have discussed the numerous components of wind turbines and their operation. To successfully generate power from these various components, wind turbines need a control system that ties the operation of all the subsystems together and manages the safe, automatic operation of the turbine. This reduces operating costs, provides consistent dynamic response and improved power quality, and helps to ensure safety. For example, a control system might monitor the wind speed, check the health of system components, release the parking brake, and connect the wind turbine to the grid. Control systems may dynamically adjust the generator torque on variable-speed wind turbines to maximize power output and adjust the blade pitch settings to limit power in high winds. Without some form of control system, a wind turbine cannot successfully and safely produce power. In addition, a wind turbine is subject to complex external loading from turbulent wind and waves (for offshore turbines), and these loadings will induce vibrations in the different components of the turbines and fluctuations of the power output. Control systems may also be used to dampen some of these effects.

The main goal of the control system is to ensure maximum and stable power production while maintaining the structural integrity of the turbine. Often, these two objectives are in conflict. For instance: high power production is accompanied by higher loads; stable power production often requires aggressive control strategies which may increase loads on the actuators or the turbine components. With the increased penetration of wind into the energy portfolio and the increased scale of wind power plants, the role of the control system is progressively shifting from an optimization at the turbine level, to an optimization of production and cost of electricity at the wind plant level, accounting for the energy market.

This chapter is intended to provide the reader with an overview of the important aspects of control systems that are specifically relevant to wind turbine control. Section 9.1 gives an overview of wind turbine control. In Section 9.2, the key aspects of dynamic control are presented. In Section 9.3, details of the dynamic control in each operating region are described. Advanced control features are explained in Section 9.4. Controller design and challenges are discussed in Section 9.5. Supervisory control is discussed in Section 9.6.

Control system design and modeling for wind turbines is a complex topic area. There are several specialized books on the control of wind turbines, for example: Gambier (2022), Luo, *et al*. (2014), Munteanu, *et al*. (2008) and, Bianchi *et al.* (2007). Various aspects of wind turbine control systems

can also be found in Andersson, et al. (2021), Garcia-Sanz and Houpis (2012), Pao and Johnson (2011), and Gasch and Twele (2002).

9.1 Wind Turbine Control Overview

9.1.1 Levels of Control Systems in Wind Turbines

Wind turbine control systems can be divided into four main levels (from high to low level): (1) a wind farm controller (2) a supervisory controller for each individual turbine, (3) an operational controller which communicates between the supervisory and subsystem controllers and (4) the subsystem controllers for the various turbine subsystems (components or actuators) in each turbine. These levels of control operate hierarchically with interlocking control loops (see Figure 1).

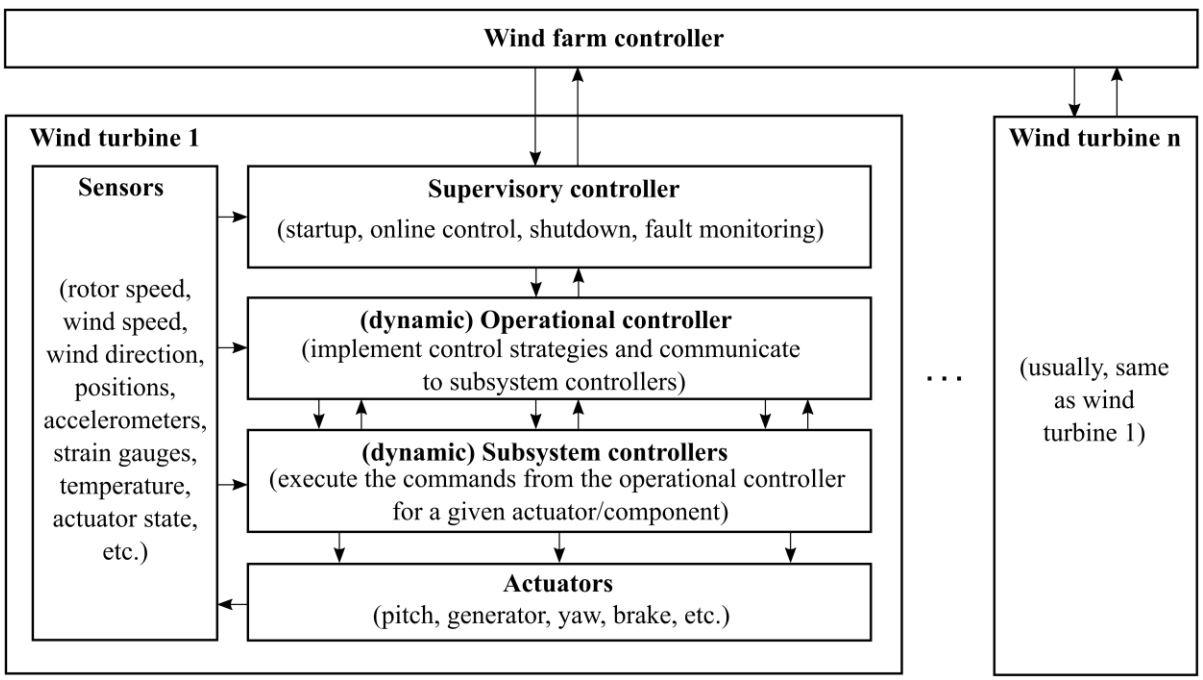

Figure 1 Four levels of control system: wind farm, wind turbine supervisory controller, operational controller, and subsystem/component controllers.

The wind farm controller, often called a supervisory control and data acquisition (SCADA) system, can initiate and shutdown turbine operation, coordinate the operation of multiple wind turbines, and store measurements signals from them all. Recent developments in wind farm controllers include implementing strategies such as derating or wake steering to optimize the power output at the wind farm level. See Chapter 15 for more information on SCADA systems.

The supervisory controller manages and monitors turbine operation in response to medium- and long-term changes in environmental and operating conditions, such as: supervising the sequence of actions needed to startup or shutdown the turbine, monitoring extreme events (storms, extreme winds or loads), monitoring the turbine health and performing fault diagnostics. See Section 9.6 for more details.

The operational controller is responsible for the implementation of a given control strategy for the operation of the turbine. It will typically take the form of a computer program. It sends commands to the subsystem controllers, which are dedicated controllers that operate individual actuators or components. The subsystem controllers typically involve power electronics to communicate to the actuators. Most controllers are "dynamic": they use dynamic inputs and dynamic commands to achieve a given strategy. Examples of dynamic operational control include: controlling the power production and loads, changing the blade pitch in response to turbulent winds, aligning the wind turbine with the main wind direction, using tuned mass dampers to avoid resonance at certain frequencies, and controlling power flow using power electronic converters. An example of dynamic subsystem control would consist of ensuring that the pitch angle requested by the operational controller is indeed achieved by the actuator, irrespective of the external loads applied on the pitch axis. Since turbines spend most of their lifetime producing power and using dynamic controllers, most of the chapter focuses on dynamic control during power production (Sections 9.2 and 9.3). In the majority of the chapter, the subsystem controllers are considered to be 'black boxes' that can respond to the commands of the operational controller.

9.1.2 Active and Passive Control

Control can be achieved in two ways: passively and actively. Passive control refers to techniques that do not require external source of electricity, while active control include at least one computer that uses sensors and sends commands to various actuators. For example, active control techniques rely on actuators to pitch the blades, employ motors to yaw the nacelle, and use the generator torque to control the turbine rotational speed or power. Most modern turbines utilize active control and therefore need a backup system to be able to operate even if the power to the grid is lost.

Historically, passive control strategies were used. One example is stall-regulated (fixed pitch) turbines with directly connected squirrel cage induction generators. The generator in these turbines keeps the rotor speed nearly constant (subject to slip, as described in Chapter 5). Power production is passively limited by aerodynamic stall: as the wind speed increases, so too does the angle of relative wind. Since the pitch is fixed, the angle of attack along the blade also increases until it reaches the stalling point of the airfoils. Rotor torque then starts to drop, resulting in decreased aerodynamic power.

Another example of a passive strategy is the aerodynamic tip-brake. This is a mechanical device placed at the tip of the blade, designed to deploy when the rotational speed exceeds a predetermined value. When the tip brakes are deployed, they significantly decreases the rotor torque, preventing a potentially catastrophic overspeed. These devices have been used with fixed-pitch turbines for situations when the there is a grid fault or the generator is otherwise disconnected from the grid.

A third example of a passive strategy used to align small scale wind turbines with the wind is the use of an aerodynamic tail fin, similar to a weathervane.

Most of this chapter focuses on active strategies used by modern wind turbine controllers. The term controller is then used to denote an onboard computer which interfaces with the different electrical circuits, sensors, and electrical and mechanical actuators.

9.1.3 Power Curve and Power Regions

Power curves were introduced in Chapter 1 and then discussed in some detail for fixed pitch, directly connected turbines in Chapter 8. Power curves for pitch-regulated, variable-speed turbines are a key result of how the controller functions. The power curve of the NREL 5-MW wind turbine is shown in the left of Figure 2. The power curve was obtained using *OpenFAST* and the *ROSCO*

controller (see Chapter 8 and Abbas *et al.*, 2022), which differs slightly from the original NREL 5-MW DISCON controller.

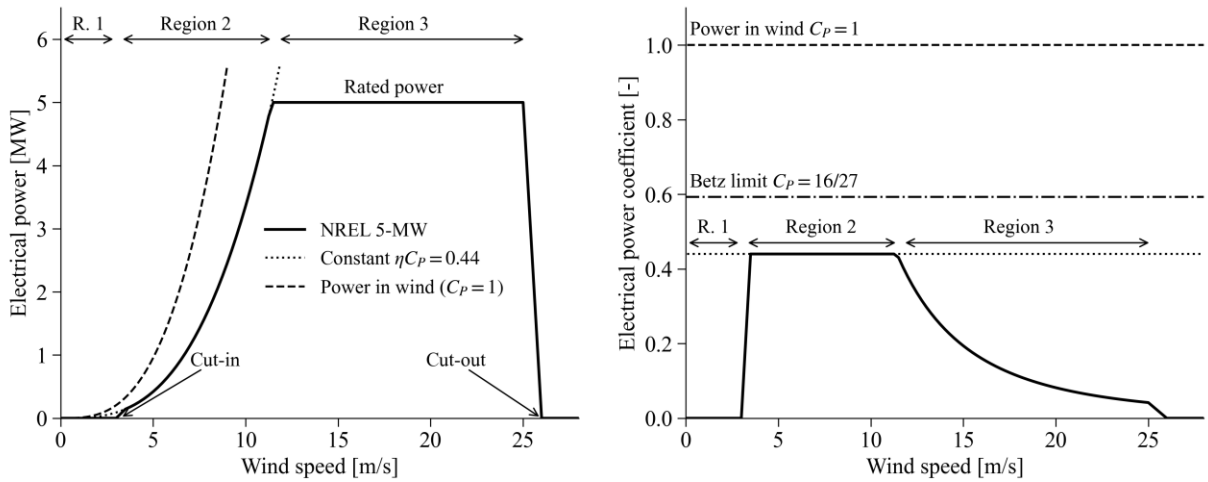

Figure 2 Example of power curves (left) and corresponding power coefficients (right).

There are four important operating regions in this curve, as summarized below. In between these regions, transitions regions (e.g. 1½, 2½, 3½) are present to smoothly switch between the different modes of operation. More details are given in Section 9.3.

- **Region 1**: the turbine is not producing power. This region extends to the cut-in wind speed.
- **Region 2**: the turbine is operating and the power increases with the wind speed.
- **Region 3**: the turbine operates at a fixed (rated) power.
- **Region 4**: the turbine stops producing power after a cut-out wind speed to avoid excessive loads, which could occur during unusually high winds.

Power curves of modern wind turbines typically follow the same regions., which is generally accepted as the optimal, cost effective way to operate a wind turbine. For reasons that will appear clear subsequently in this chapter, active control is key to obtain such a performance curve, because the rotational speed and pitch angle of the wind turbine needs to be continuously adjusted.

The dashed line in the left of Figure 2, shows the total power available in the wind. As discussed in detail in Chapter 3, the wind turbine rotor only extracts a portion of the power available in the wind. The power coefficient expresses the ratios of the rotor power to the total power available in the wind. TThe notation C_P is used for the aerodynamic power coefficient. It is also possible to define the electrical (generator) power coefficient, equal to ηC_P, where η is the drivetrain and generator efficiency ($\eta \leq 1$), accounting for any kind of losses between the aerodynamic power and the electrical power. Values of the electrical power coefficient for the NREL 5-MW are shown at the right of Figure 2.

It is observed that the turbine operates at a constant power coefficient with value ηC_P =0.44 in Region 2, and this is the region when the rotor efficiency is at maximum. In Region 3, the power coefficient is lower. The typical maximum power coefficient of modern turbines is around 0.4 to 0.5. These values are lower than the theoretical Betz limit of 16/27, as discussed in Chapter 3). If one were able to maintain a constant power coefficient throughout the range of wind speeds, one would obtain the power curves labeled "Constant ηC_P = 0.44". One could harvest more power at

higher wind speed, but at the expense of requiring a more powerful generator and ensuring that the turbines can withstand the loads which also increase with wind speed. It is recalled from Chapter 3, that the power in the wind increases with the cube of the speed while the forces increase with the square. To reach a compromise between cost (generator size, structural ability to withstand loads) and power generated, the power is capped at a design value (the rated power) in Region 3. The controller ensures that the power production is in line with the designed power curve: starting and shutting down the turbine, adjusting the rotor speed in Region 2, and limiting the power in Region 3.

9.2 Key Aspects of Dynamic Control

This section presents the key aspects of dynamic control. Dynamic control consists of controlling the wind turbine (actuators, generators, motors) based on a set of inputs (from sensors) in order to achieve a given strategy (such as maximizing power or limiting loads). The time scales of dynamic control are of the order of milliseconds to seconds. The focus of this section is on dynamic control during normal operation. Normal operation refers to cases where the wind speed is between the cut-in and cut-out wind speeds and the turbine is "available", that is, not in a faulty state, or under maintenance, and the turbine is connected to the electrical grid. For a windy site, this represents most of the lifetime of the wind turbine. During normal operation, the controller uses sensors and actuators to satisfy given objectives. The main components of the rotor nacelle assembly of a modern wind turbine are shown in Figure 3, together with some of the key control actuators (pitch, yaw, and generator torque) and examples of sensors (wind vane and anemometer) that will be discussed in this section. Background information on dynamic control system design can be found in textbooks such as Nise (2019).

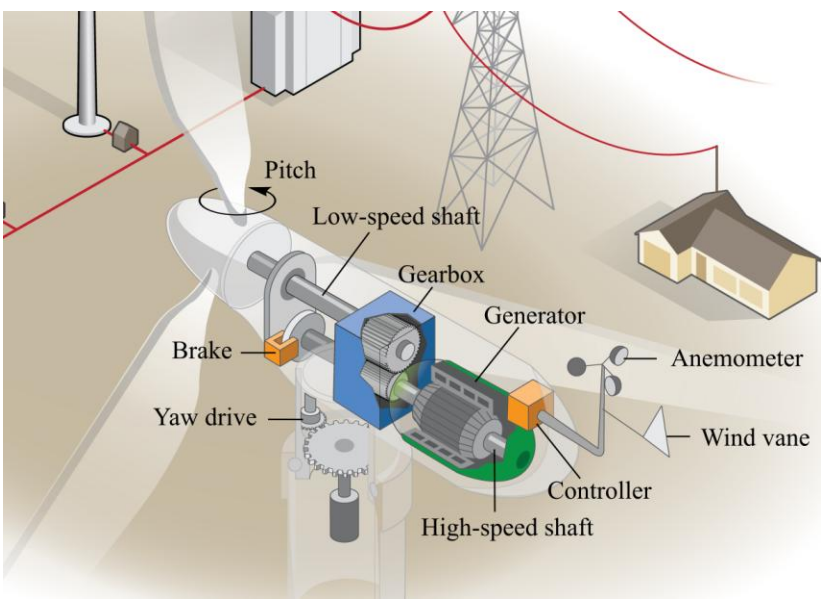

Figure 3 Sketch of the main sensors and actuators used in wind turbine active dynamic control. Based on a figure provided with courtesy of the U.S. Department of Energy (https://www.energy.gov/eere/inside-wind-turbine)

9.2.1 Control Objectives

During normal operations, different control objectives may be considered:

- **Power regulation**: the objective is to produce power according to the power curve and maximize the annual energy production within the speed and load constraints of the turbine components.
- **Power quality**: providing acceptable power quality at the point of connection to the grid.
- **Speed regulation**: the rotational speed is limited to reduce noise emission and to be within the range of operation of the generator. Aerodynamic noise is an important concern for wind energy, and it typically increases with the relative wind speed, which is greatest at the tip of the blade and close to the tip-speed ΩR; see also Chapter 14.
- **Safety limits and load mitigation**: the objective is to ensure that the turbine keeps its structural integrity. The controller should ensure safe turbine operation, prevent extreme loads from occurring, including excessive transient and resonance-induced loads, and minimize fatigue damage. The loads and vibrations need to remain within a certain level to ensure that the turbine will last as long as its expected lifetime (wind turbines are designed to last between 20 and 25 years). Control strategies may be used if a problem is observed in the field that might lower the expected lifetime of the turbine.

In most cases, all the control objectives above need to be considered. The control objectives are often in conflict, requiring compromises and tradeoffs.

As wind turbines become larger, and as offshore operation continues to grow, these objectives become even more challenging to meet. Modern offshore wind turbines have blade lengths in excess of 100 m, which are extremely long and flexible structures that operate in a complex environment. Moreover, access to offshore turbines is often limited during much of the year, increasing the need for reliable turbine operation. Achieving the control objectives therefore requires careful design of the control system.

9.2.2 Wind Turbine Sensors

On a large modern wind turbine, many sensors are used to communicate important aspects of turbine operation to the control system. The main variable used for feedback control during operation of the wind turbine is the rotor speed. Therefore, rotor speed sensors are placed on the low-speed or high-speed shaft. Anemometers are also placed on the nacelle to obtain information about the wind speed, which may be used by the supervisory control to determine whether to start the wind turbine. Other measured variables might include:

- speeds (generator speed, rotor speed, wind speed, yaw rate, direction of rotation);
- temperatures (gearbox oil, hydraulic oil, gearbox bearing, generator bearing, generator winding, ambient air, electronic temperatures);
- position (blade pitch, teeter angle, aileron position, blade azimuth, yaw position, yaw error, tilt angle, wind direction);
- electrical characteristics (grid power, current, power factor, voltage, grid frequency, ground faults, converter operation);
- fluid flow parameters (hydraulic or pneumatic pressures, hydraulic oil level, hydraulic oil flow);
- motion, stresses, and strain (tower top acceleration, tower strain, shaft torque, gearbox vibration, blade root bending moment);
- environmental conditions (turbine or sensor icing, humidity, lightning).

Reviewing the different technologies used to measure these measured variables is beyond the scope of this book. It is important to note, however, that all sensors will have limitations, such as: 1) a limited measuring range and frequency band in which the sensor can operate and is reliable;

2) possible drift, noise and biases introduced with time and therefore requiring recalibration; 3) the sensors may only provide a partial estimate of the quantity of interest due to physical limitations. For instance, the wind sensors located on the nacelle suffer from their placement in the wake of the rotor, and therefore the data they produce does not correspond to the free stream wind speed. An important part of control engineering consists of filtering the data coming from the sensors, applying transfer function and estimation techniques to attempt to obtain a cleaner value of the quantity of interest. For instance, most control systems use a wind speed estimator that estimates a rotor averaged wind speed based on sensors different from the nacelle anemometer. The most common type of estimator is a Kalman filter, which is used to obtain an "optimal" estimate of a quantity by combining different measurements with a physical model of the system (see e.g. Zarchan and Musoff 2015). In this chapter, it will be assumed that the filtering and estimation of physical quantities has already been performed before the sensor data is used by the controller.

9.2.3 Control Actuators

The control system performs actions on the wind turbine via actuators. The main control actuation options of a modern wind turbine are the pitch and yaw motors and generator torque. The pitch actuator is mostly active in Region 3 and in transition regions, whereas the generator torque controller is active throughout the operation. Details on these control strategies will be given in Section 9.3, but as an introduction is important to note the following:

- Changing the pitch of the blade, will change the angle of attack throughout the blade, thereby changing the aerodynamic thrust and torque
- Changing the generator torque will change the rotational speed (and the rotor torque).

Both the pitch and torque actuations can affect the speed and torque on the shaft, and since power is the product of the two, both can be used to control the power.

Actuators in a wind turbine may be of the following kind:

- **Electromechanical devices.** Electromechanical devices include DC motors, stepper motors, AC motors with solid state controllers, linear actuators, magnets, and solid-state switching components.
- **Hydraulic pistons.** Hydraulic pistons are often used in positioning systems that need high power and speed such as the pitching system.
- **Resistance heaters and fans.** Resistance heaters and fans are used to control temperature.

Actuator systems may include gears, linkages, and other machine elements that modify the actuating force or direction. When the control signal from the controller is not powerful enough to power the actuator, an amplifier is needed between the controller and the actuator. Typical power amplifiers in a wind turbine include electrical amplifiers, hydraulic pumps, and various power electronic switches.

9.2.3.1 Generator Torque Control

Generator torque control can be used to control rotor speed, tip-speed ratio, and power. This control is active during the entire operation of the wind turbine. The generator torque has fast response time, at least an order of magnitude faster than the time constant of the rotor speed, which makes is an effective actuator for controlling the rotor speed (Pao and Johnson 2011). The generator may

be regulated by the design characteristics of the generator or independently controlled with the use of power electronic converters:

- Directly connected generators operate over a very small or no speed range and provide whatever torque is required to maintain operation at or near synchronous speed (see Chapter 5).
  - Directly connected synchronous generators have no speed variations and, thus, any imposed torque results in an almost instantaneous compensating torque. This can result in high torque and power spikes under some conditions. As a result, very few wind turbines today use directly connected synchronous generators.
  - Directly connected conventional (squirrel cage) induction generators change speed by as much as a few percent of the synchronous speed (this is referred to as slip). This results in a softer response and lower torque spikes than with a synchronous generator.
- Alternatively, the generator can be connected to the grid through a power electronic converter. This allows the generator torque to be very rapidly set to almost any desired value. The converter determines the frequency, phase, and voltage of the current flowing from the generator, thus controlling generator torque. This is the approach used in most modern turbines. Either wound rotor induction generators or synchronous generators may be employed in this way.

9.2.3.2 Pitch Control

Hydraulic pistons or electro-mechanical actuators are typically used to pitch the blades. The pitching system has a physical limit on the pitch rate (i.e., the rate at which the angle may be varied). The pitch rate is typically between 2 and 10 deg/s on modern turbines. Depending on the system, some inertia, stiffness and damping are present in the actuator, leading to a dynamic response such that the actuator torque on the blade has to balance the aerodynamic torque and structural twisting moment of the blade. Consequently, there is often a lag between the commanded pitch and the actual pitch of the blade. Until recently, turbines used a collective signal to pitch all the blades simultaneously. With recent advancements in controls and actuators, more and more control systems are adopting individual pitch control (IPC), whereby each blade can be operated at a different pitch angle. IPC makes a lot of sense as rotors get larger since the blades experience very different wind as they sweep though the atmospheric boundary layer (for instance due to shear). Another advantage of IPC is that it gives stronger control authority to reduce unwanted motions of the turbine. A strong control authority means that the controller can easily change the value it is trying to control. More details on IPC are given in Section 9.4.

9.2.3.3 Yaw Orientation Control

An active yaw system includes one or more motors at the nacelle/tower interface (see Chapter 7). The control system ensures that the nacelle remains aligned with the main wind direction. Gyroscopic loads need to be considered in the design of a yaw power regulation system. If gyroscopic loads are a concern, yaw rate can be limited (typically with a maximum of 1 deg/s for modern wind turbines), but limiting yaw rate may affect the ability to regulate power output. It is noted that the yawing acting occurs at lower frequency than the pitch or generator torque control.

Both the yaw and pitch system typically involve gears. To avoid wear and tear of the gears when the gear system remains at a fixed position, the controller typically applies small step changes of yaw and pitch angles every few minutes.

9.2.4 Turbine Power Production and Efficiency

The turbine power production depends upon a combination of aerodynamic performance and control system operation, which can be understood by examining the C_P-λ curve, where C_P is the power coefficient and λ is the tip-speed ratio. Both terms were defined in Chapter 3, but their definitions are recalled below. The tip-speed ratio is defined as:

$$\lambda = \frac{\Omega R}{U} \tag{1}$$

where Ω is the rotor speed, R is the rotor radius, and U is a characteristic wind speed (under turbulent wind conditions, this might be taken as the average over the rotor area). The power coefficient represents the fraction of the power in the wind that is extracted by the rotor:

$$C_p = \frac{P}{\rho U^3 A / 2} = \frac{Rotor\ power}{Power\ in\ the\ wind} \tag{2}$$

where P is the power extracted by the rotor, A is the area swept by the blades (e.g. πR^2), and ρ is the air density.

An example C_P-λ curve is shown in Figure 4 for the NREL 5-MW turbine. The maximum power coefficient is obtained for a pitch angle of 0 deg for this turbine. In this case, the aerodynamic efficiency peaks at a tip-speed ratio of approximately 7.5. The optimal tip-speed ratio, optimal pitch angle, and associated maximum C_P are design features of any rotor and can only be adjusted by changing the aerodynamic design (see Chapter 3). To maximize power production, the control system should attempt to control the rotor speed such that the tip-speed ratio is held constant at the optimal value. Therefore, as wind speed inevitably changes over time, the rotor speed should be controlled proportionally to preserve a constant value of λ and therefore maximize aerodynamic efficiency. Rotor speed control is therefore critical for power production control. A commonly employed practical control algorithm for achieving optimal tip speed control is presented in Section 9.3.3.

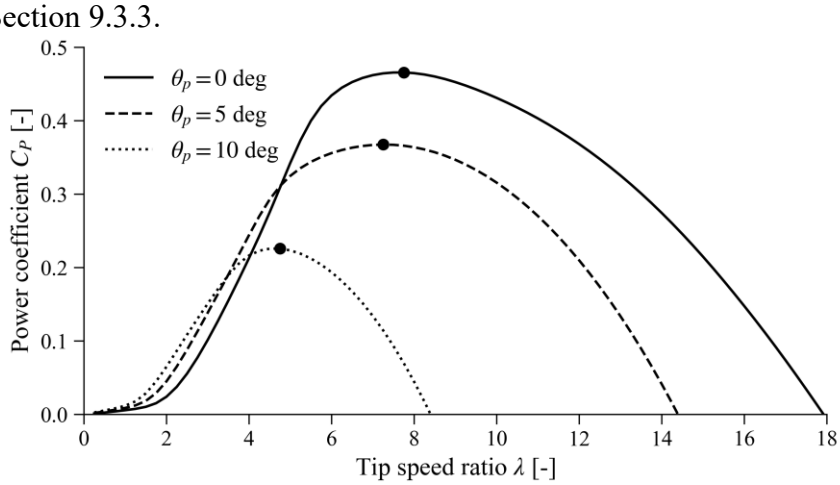

Figure 4 Example of C_P-λ curve for the NREL 5-MW wind turbine. The pitch angle θ_p is kept fixed while the tip-speed ratio is changed.

The impact of blade pitch on the C_P-λ curve is also shown in Figure 4. The performance of the rotor is greatly reduced as the pitch angle is increased. This explains why blade pitching is used to lower the power production at high wind speed, or even stop the rotation when the turbine is placed

in parked position. Three-dimensional contours of the power and thrust coefficients as function of tip-speed ratio are often used to devise a control strategy. An example of such 3D surface is given in Figure 5. It is seen from the figure that a maximum power coefficient is obtained for a given value of the tip-speed ratio and pitch angle, referred to as the optimal values. For values other than optimal, the same power coefficient can be obtained for different values of pitch and tip-speed ratio, but at these operating points, the thrust coefficient will be different, which can lead to different loads. Therefore, different controller strategies can be implemented based on the compromise between thrust and power.

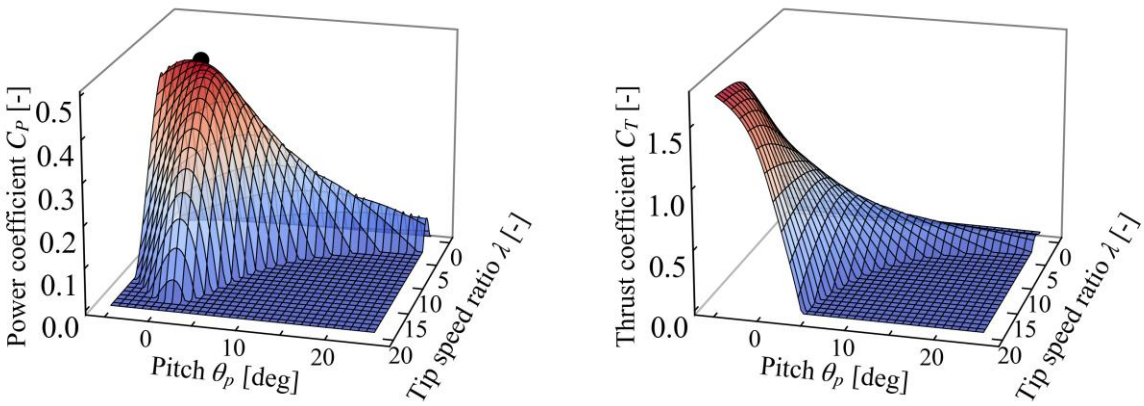

Figure 5 Example of 3D surface plot of the power and thrust coefficients for the NREL 5-MW . The black dot on the left figure indicates the maximum power coefficient, which is obtained for the optimal pitch angle and optimal tip-speed ratio.

9.2.5 Control Theory with Application to a Pitch Actuator System

This section presents some of the key aspects of control theory used in dynamic control: 1) establishing a model (typically, a set of differential equations) from a physical system; 2) linearizing the system; 3) designing a controller using an open-loop or closed-loop system; 4) and studying the system using tools such as transfer functions or state-space models. Throughout this section, these different steps and notions are illustrated using a model of a pitch mechanism driven by an AC servo motor.

9.2.5.1 The Physical System

A simple pitch control mechanism is considered, which uses an electric motor to rotate the blade about its pitch axis. To rotate the blade, a specific amount of current needs to be applied to the motor for a predetermined amount of time. The motor needs to balance the pitching moment applied on the blade from aerodynamic and inertial loads (disturbances to the system). The role of the controller is to ensure that the blade pitches by the right amount without a knowledge of the system disturbances and accounting for the possible variability in the system.

9.2.5.2 Model Development and Linearization

Before designing a controller, a mathematical model of the system should be developed first. Here, the combined blade and pitch mechanism is modeled using a one degree of freedom mass-spring-damper system. The torque from the AC servo motor is modeled as a linear combination of terms that are a function of motor speed and of applied voltage (see Golnaraghi and Key, 2017). In the

model presented here, the motor torque and speed are referred to the blade side of the pitch mechanism. The differential equation for this system has the system dynamics terms on the left and the external torques from the motor and disturbance on the right:

(3) $$J\ddot{\theta}_p + C\dot{\theta}_p + K\theta_p = kv(t) + c\dot{\theta}_p + Q_p$$

where θ_p is the angular position of the motor (the blade pitch angle), J is the total inertia of the blade and motor, C is the pitch system coefficient of viscous friction, K is the pitch system spring constant, k is the slope of the torque–voltage curve for motor/pitch mechanism combination, $v(t)$ is the voltage applied to the motor terminals, c is the slope of the torque–speed curve for motor/pitch mechanism combination, and Q_p is a pitching moment due to dynamic and aerodynamic forces that acts as a disturbance in the system.

If the system is at steady state, then the derivatives of the pitch angle are zero and $v(t)$ is a constant value, v. In this case, the differential equation reduces to:

(4) $$\theta_p = \frac{k}{K}v + \frac{Q_p}{K}$$

Most of the tools used in control theory manipulate linear differential equations. If the dynamic equations are nonlinear, they will need to be linearized (see Chapter 4). In this example, Equation (3) is already linear except for the pitching moment which may be a nonlinear function of the pitch angle. In this example, the pitching moment is the input of the system, and its linearization is not required.

9.2.5.3 Open-loop and Closed-loop Response to Disturbances

There are two categories of controllers: open-loop and closed-loop controllers. The basic differences between the two systems are illustrated in Figure 6. The relationships between the various dynamic elements in a controlled system are often illustrated with the use of block diagrams, such as the one shown in Figure 6. In an open-loop system, the controller actions are based on the desired system state, with no reference to the actual state of the process (i.e. no measurements). In closed-loop feedback systems, the controller is designed to use the difference between the desired and the actual system output to determine its actions. Closed-loop controllers offer superior control authority; they are generally preferred and are most common. For this reason, the term “open-loop system” is often used to refer to the system without the controller.

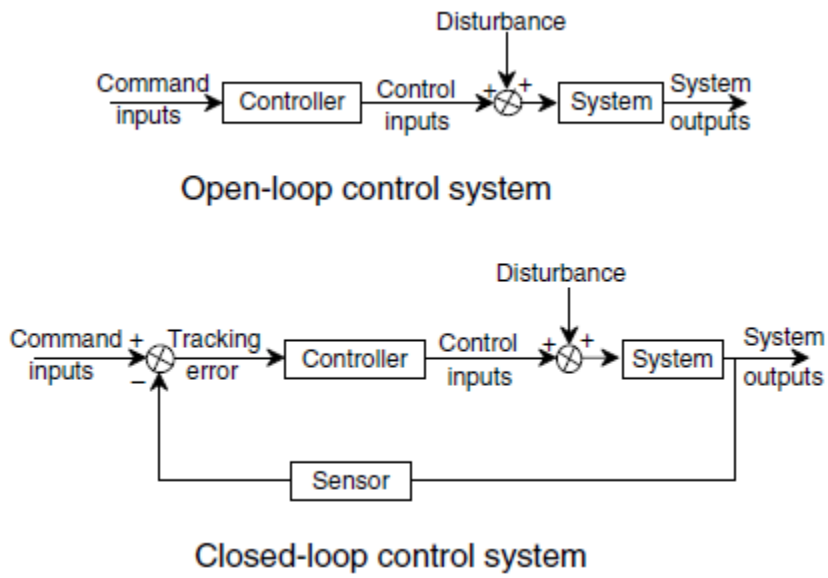

Figure 6 Open-loop and Closed-loop Response to Disturbances

9.2.5.4 Example of Open-loop system

Assuming that the airfoil designer has tried to minimize any pitching moment, one could design a control system that applied a specific voltage to the motor for a desired 'reference' pitch angle, $\theta_{p,ref}$: When the disturbances are zero, Equation (5) then gives a relationship between the voltage and the desired pitch angle:

(5) $$v = \frac{K}{k}\theta_{p,ref}$$

In this case, the differential equation for the open-loop system is:

(6) $$J\ddot{\theta}_p + (C - c)\dot{\theta}_p + K\theta_p = K\theta_{p,ref} + Q_p$$

Here, the pitch angle is the output and the system has two inputs, the voltage to the pitch motor (v) and a disturbance torque from the aerodynamic and dynamic pitching moments on the blade (Q_p). If one assumes that all derivatives and the pitching disturbance torque are zero, it can be seen that the steady state response of the system to a desired pitch angle command is, indeed, that desired pitch angle. A block diagram for the open-loop system (without damping C) is shown in Figure 7.

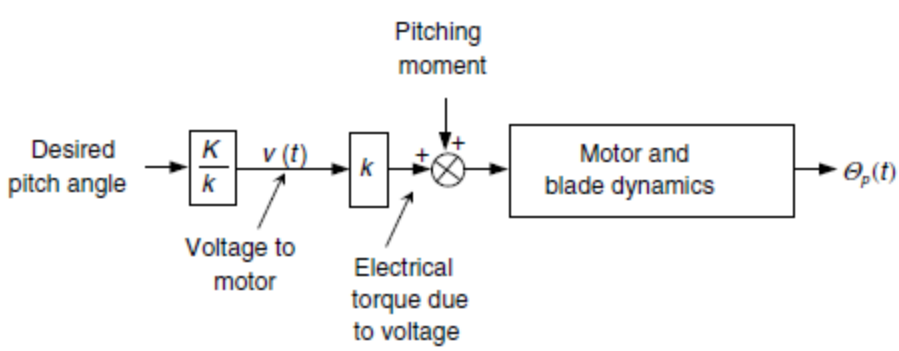

Figure 7 Open-loop pitch control mechanism; for notation, see text

9.2.5.5 Equation Solution using Laplace Transform – Transfer Function

Laplace transforms can be used to solve differential equations like Equation (6). The Laplace transform of the system response, about steady state operation, to an impulse input is referred to in classical control theory as the system transfer function. The transfer function provides the relationship between the inputs and outputs of the system in the Laplace-transformed space. It is often used in control system design to characterize system dynamics.

We briefly present the relevant notions of Laplace transforms in this paragraph. The Laplace transform, noted $\mathcal{L}$, can be applied to linear time-invariant systems. It transforms a function, f, of the time variable, t, into a function of the complex variable, s, as follows:

(7) $$\mathcal{L}(f(t)) = \int_0^\infty f(t)e^{-st}\,dt = F(s)$$

By convention, the transformed function is written with an uppercase. We note the following relationships:

(8) $$\mathcal{L}(a\,f(t)) = a\,F(s), \quad \mathcal{L}\left(\dot{f}(t)\right) = s\,F(s), \quad \mathcal{L}\left(\ddot{f}(t)\right) = s^2F(s), \; \mathcal{L}\left(\dddot{f}(t)\right) = s^3F(s)$$

where a is a scalar. For more background information, the reader is referred to Golnaraghi and Kuo (2017) or Nise (2019).

The system transfer function can be found by taking the Laplace transform of the open-loop differential equation, solving for the pitch angle, and assuming that initial conditions are all zero. Applying the rules given in Equation (8) to Equation (6), the transfer function of this system is:

(9) $$\Theta_p(s) = \frac{K\Theta_{p,ref}}{Js^2+(C-c)s+K} + \frac{Q_p(s)}{Js^2+(C-c)s+K}$$

where $\Theta_p(s)$, $\Theta_{p,re}$, and $Q_p(s)$ are the Laplace transforms of θ_p, $\theta_{p,ref}$, and $Q_p(t)$. The factor in front of $\Theta_{p,ref}$ in Equation (9) is the transfer function from the voltage input to the pitch angle output. The factor in front of Q_p is the transfer function from the disturbance (the pitching moment, Q_p) to the dynamic pitch angle ($\Theta_{\mathrm{p,dyn}}(\mathrm{s})$):

10 $$\frac{\Theta_{p,dyn}(s)}{Q_p(s)} = \frac{1}{Js^2+(C-c)s+K}$$

The time responses can be obtained by taking the inverse Laplace transforms of the transfer functions and assuming that $\Theta_{p,ref}(s)$ and $Q_p(s)$ are known. For instance, a unit step input would be given by $Q_p(s) = 1/s$. Reponses to unit steps and impulse steps are readily obtained for transfer functions consisting of polynomials on the numerator and denominators, using analytical tools, or software packages (such as Wolfram, 2023, MATLAB®, or Sympy). If, for example, the motor and blade parameters are $J = \frac{1}{41}$, $(C - c) = \frac{1}{13}$ and $K = 1$, then the corresponding response to a step disturbance is shown in Figure 8.

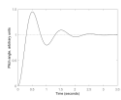

Figure 8 Sample pitch system response to a step change of the disturbance torque

In Figure 8, the deviation from ideal operation should be zero, but the pitch disturbance results in a steady pitch angle error (this error is arbitrarily scaled to 1 in the figure). From Equation (4), the steady state positioning error due to the pitching moment is:

$$\theta_p - \theta_{p,ref} = \frac{Q_p}{K} \tag{11}$$

In practice, open-loop control systems often have deficiencies that significantly affect system operation. Manufacturing variability, wear, changes in operation with temperature and time, and outside disturbances can adversely affect open-loop system performance. In this example, changes in the wind speed, rotor speed, blade icing, or anything else that might affect the pitching moment would change the pitch. If the effects of these changes in operation become a problem, closed-loop control systems are used to improve system performance without significantly complicating the control system.

9.2.5.6 Example of Closed-loop System using a PID-controller

In a closed-loop control system, a measurement of the pitch angle is incorporated into the input to the pitch control system, and corrections can be made for errors in the position of the blade. Typically, the controller provides a control output that is a function of the 'tracking error', which is the difference between the desired system output and the measured output. The block diagram of such a closed-loop system (without the damping *C*) is shown in Figure 9.

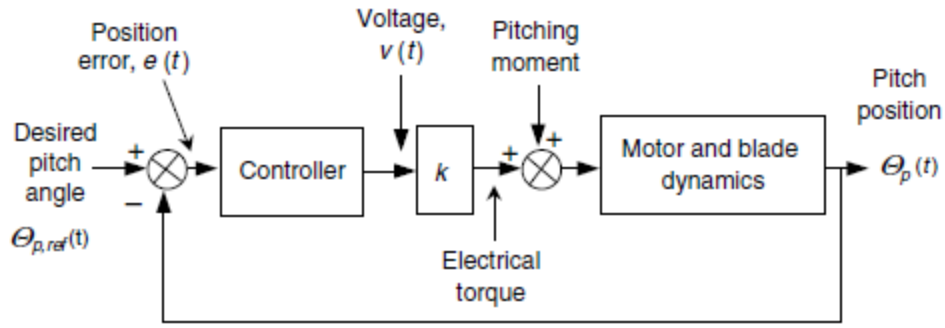

Figure 9 Closed-loop pitch mechanism example

The controller can be designed with any dynamic properties that might help the system achieve the desired operation. There are, however, some standard approaches to control systems that are often implemented and are used as references in considering control system design. Some of these standard approaches include *proportional (P)*, *derivative (D)*, and *integral* (I) control. Often these approaches are combined to yield a proportional–integral (PI) controller or a proportional–integral–derivative (PID)-controller.

The differential equation of the PID-controller for the voltage $v(t)$ of the pitch system motor is:

(12) $$v(t) = K_p e(t) + K_I \int e(t)\mathrm{d}t + K_D \dot{e}(t)$$

where the constants of proportionality are K_P, K_I, and K_D and where $e(t) = \theta_{p,ref}(t) - \theta_p(t)$ is the error, the difference between the desired and the measured pitch angle. Equation (12) is a general equation describing a PID-controller where a control signal (on the left hand side) is given as function of a signal error. The constants of proportionality, K_P, K_I, and K_D, are referred to as "gains" in control engineering literature. The proportional gain, K_P, acts on the present value of the error, and is effective as long as the error is non-zero. The integral gain, K_I, uses "past" values of the error and ensures that the steady-state error is zero. The derivative gain acts on the predicted ("future") value of the error because the time derivative (or "slope") of the error indicates where the error is likely to be in the next time steps.

In our example, a PI-controller will be used ($K_D = 0$). The closed-loop equation is obtained by substituting the definition of the controller, Equation (12) without the derivative term, into Equation (3), and using the definition of $e(t)$ from above. After differentiating the complete equation and rearranging, Equation (13) is obtained. The resulting controlled system is now a third order system with two controller constants, K_P and K_I:

(13) $$J\dddot{\theta}_p + (C - c)\ddot{\theta}_p + (K + kK_P)\dot{\theta}_p + kK_I\theta_p = kK_P\dot{\theta}_{p,ref} + kK_I\theta_{p,ref} + \dot{Q}_p$$

If we assume here that $\theta_{p,ref}$ is zero and does not change, then the transfer function for the closed loop controller corresponding to Equation (12) is:

14 $$\frac{\Theta_p(s)}{Q_p(s)} = \frac{s}{Js^3 + (C-c)s^2 + (K + kK_P)s + kK_I}$$

Once again, the dynamic response of the closed-loop system to a unit step disturbance can be found by using inverse Laplace transforms. For example, if it is assumed that the motor and blade dynamics remain the same, and that $K_P = K_I = 2$ and that $k = 1$, then the response to a step

disturbance is shown in Figure 10. The figure includes the open-loop response for comparison. The disturbance clearly affects the closed-loop system less than the open-loop system.

While further improvements might be made to improve dynamic response of the system, a PI-controller would correctly position the blade under a variety of wind and operating conditions. Thus, without adding too much complexity, the blade can be positioned at any desired position in high or low winds, under icing conditions, and with a sticking bearing on the pitch mechanism. This is a significant improvement over the open-loop controller.

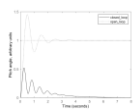

Figure 10 Sample closed-loop and open-loop pitch system response to a step disturbance

9.2.5.7 Typical Control Issues - Resonances

In the typical design process of a controller, it is important to ensure that the controller provides a stable response when the system is excited by the environmental loads (which excites the system with a broad range of frequencies), and that the controller does not excite the system at critical natural frequencies of the system. The response of the control system to step and sinusoidal disturbances is useful to study the stability of the closed-loop system.

The pitch controller presented in Section 9.2.5 provides reasonable disturbance rejection of a step input. This indicates that step changes and less severe changes in operating conditions can be compensated for by the pitch control system. Analysis of the differential equation for the closed-loop system (Equation (13)) or of the system transfer function shows that the closed-loop system has a natural frequency of 6.76 radians/second (1.0 Hz), and a damping ratio of 0.24 (see Chapter 4 for information on natural frequencies and damping ratios). If this pitch control system experienced a sinusoidal disturbance, as it might with wind shear, with a frequency near the natural frequency of the closed-loop system, then the system response might be significantly magnified over that due to other disturbances. For example, the response to a sinusoidal disturbance with a magnitude of 1 and a frequency of 1.04 Hz is shown in Figure 11.

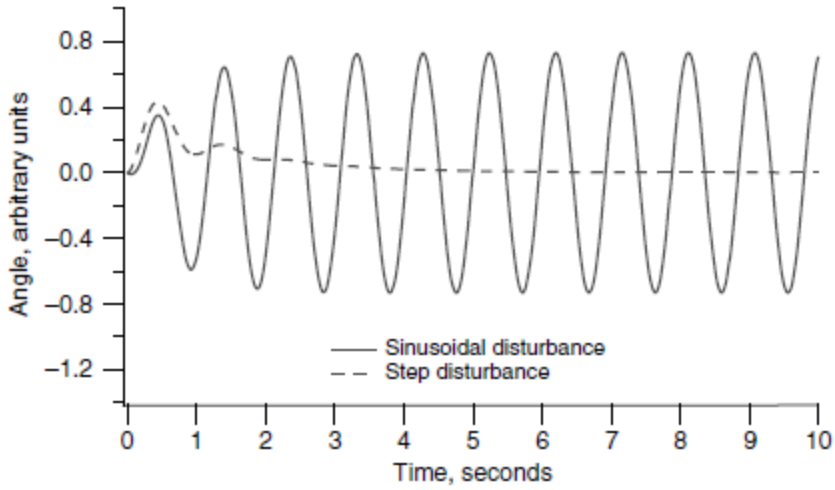

Figure 11 Closed-loop pitch system response to unit sinusoidal and step disturbances

The closed-loop system clearly does a much poorer job of managing disturbances near the system natural frequency than it does managing step disturbances. The magnitude of the response depends on the frequency of the disturbance and the damping in the system. Not only could the pitch fluctuations induced by the disturbance wear out the pitch mechanism, but oscillating shaft torque from the aerodynamics caused by the oscillating blade pitch could introduce resonances in other feedback paths. This sample control system was designed specifically to illustrate these issues. A well-designed control system would avoid exciting system natural frequencies and might even be able to provide additional damping at those frequencies; see Section 9.5.

9.3 Main Regions of Dynamic Control

While maximizing power output is one goal of the dynamic control system, it clearly cannot be the only goal. In high wind speeds, the allowable power output is limited by the size of the generator, and thus the dynamic controller must limit the power production as wind speed increases. Thus, typical power curves are broken up into 3 primary operating regions as introduced in Section 9.1.3 and illustrated in Figure 2. This section presents some of the control strategies implemented to produce such curves.

9.3.1 Power Curve – Power vs Wind Speed

To understand the different control regions, one needs to look at the operating conditions of the turbines (wind speed, rotor speed, pitch and tip-speed ratio) and the aerodynamic performance (power and thrust). These quantities are shown for the NREL 5-MW in Figure 12.

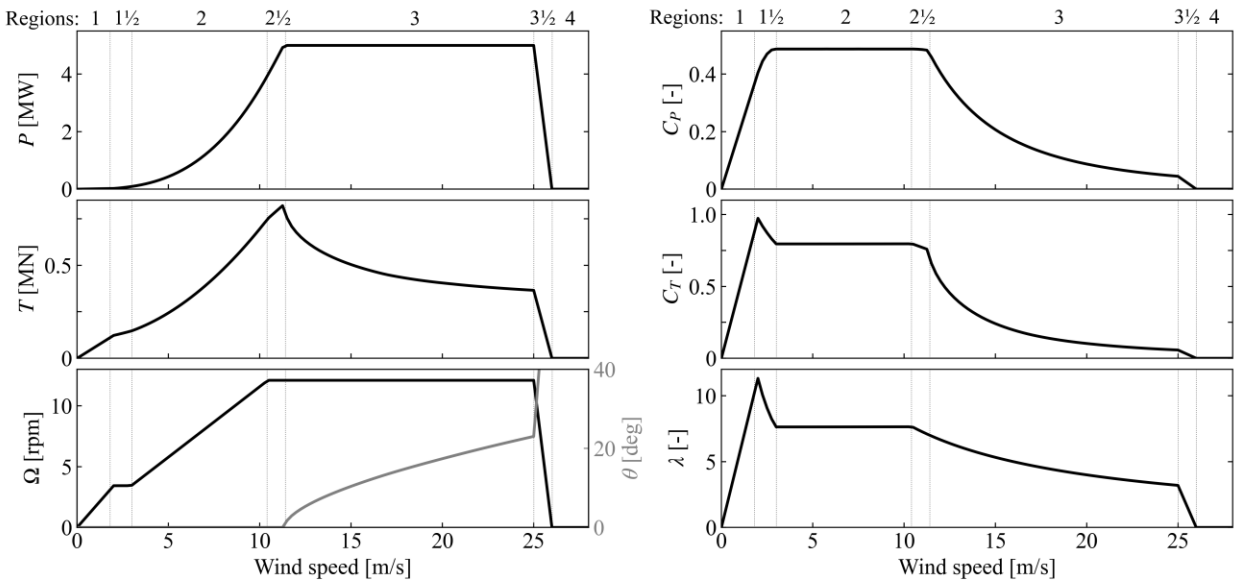

Figure 12 Operating conditions and performance curves for the NREL 5-MW turbine (onshore): Power (P), Thrust (T), Rotor speed (Ω), Power coefficient (C_P), Thrust coefficient (C_T) and tip-speed ratio (λ).

The three main control regions and "intermediate" regions, are defined as follows:

- **Region 1** is defined as the region where the turbine does not produce power and the mean wind speed is below the cut-in wind speed. In this region, the generator is disconnected (no generator torque and therefore no power), the turbine is allowed to freewheel and the rotor speed will increase progressively. For the NREL 5-MW the cut-in wind speed is 3 m/s, which is typical of modern turbine, though some designs with large rotors can start at even lower wind speeds.
- **Region 1½**: When the mean wind speed exceeds the cut-in wind speed, the generator is connected, and the turbine begins to produce power. This region is typically labeled as Region 1½, because the turbine is not yet operating at its optimal tip-speed ratio; instead, because there is a minimum generator speed, the tip-speed ratio exceeds the optimal value. In some control system designs, the pitching system is active in this region to maximize the power output. For this example of the NREL 5-MW, the rotor speed is kept constant to a specified minimum value in this region.
- **Region 2**: As the mean wind speed increases, the turbine enters Region 2, or optimal tip-speed ratio operation. In this region, the variable speed generator control is used to track the optimal tip-speed ratio, maximizing aerodynamic efficiency (as discussed Section 9.2.4). The tip-speed ratio and pitch are held constant at their optimal values, resulting in a constant power coefficient. Because the tip-speed ratio is constant, the rotational speed must change when the wind speed changes. The generator torque increases with the square of the rotational speed in Region 2. See Section 9.3.3 for a detailed discussion of optimal tip-speed ratio control algorithms.
- **Region 2½**: As the wind speed continues to increase, and thus the rotor speed, a maximum (rated) rotor speed is reached, typically before the rated power production is reached. This is Region 2½. At this point, the rotor speed is held constant while the generator torque and

therefore power output increases until the rated power is reached at the rated wind speed. The rotor speed is often regulated using the blade pitch control system, discussed next for Region 3. The maximum rotor speed for the NREL 5-MW is 12.1 rpm. The maximum thrust values often occur in Region 2½.

- **Region 3**: In Region 3, the turbine operates at its rated power. When the wind speed exceeds the rated wind speed, and the dynamic control aims to keep the rotor speed and the power output constant. For the NREL 5-MW, the rated power is 5 MW, and the rated wind speed is approximatively 11.4 m/s. There are many factors influencing the rated values, such as the size of the generator, the size of the rotor, the wind speed at hub height, and the design of the turbine. In Region 3, the generator power is constant, but the thrust decreases because the blades are pitching to feather, decreasing the angle of attack and reducing the aerodynamic forces on the blades. The rotor speed is primarily controlled using the blade pitch system. The blades are usually pitched "collectively" for this purpose, meaning they all have the same pitch angle. Individual pitch control (IPC) for load reduction can be superimposed upon this collective pitch angle (see Section 9.4.4). The blade pitch is adjusted to minimize the difference between the actual measured rotor speed and the rated rotor speed. Modern wind turbines are "pitch-to-feather": as the wind speed increases, the blade pitch angle also increases, which reduces the angle of attack on the blades, and therefore reduces the lift coefficient. Another approach is "pitch-to-stall" which increases the angle of attack until the airfoil stalls, which decreases the loads but can introduce stability issue. The dynamic pitch control system often employs a proportional integral (PI) controller to minimize the rotor speed error (see Section 9.2.5). The values of the PI gains are determined by the control system designer and typically vary with the mean wind speed. The use of control system gains that vary according to system operating conditions is referred to as "gain scheduling." To control the power output in Region 3, the generator torque is controlled in concert with the blade pitch. There are two strategies. The generator torque may be held constant, which in combination with a constant generator speed, will produce constant power. Alternatively, the generator torque can be controlled to be inversely proportional to the generator speed, again producing constant power. More details on Region 3 control are given in Section 9.3.4.
- **Region 3½**: To avoid excessive loads on the turbine, the turbine's power is progressively reduced after a specified wind speed typically around 25 m/s. This is achieved by increasing the pitch angle.
- **Region 4**: The blades are pitched even more, and the turbine stops producing power at the cut-out wind speed. As seen in Figure 12, the cut-out wind speed is around 27 m/s, which is typical of modern wind turbines. The original NREL 5-MW turbine model did not have a Region 3½ and therefore the cut-out wind speed of 25 m/s is often used in the literature.

The overall closed-loop dynamic control loop can be visualized in Figure 13 below. The rotor speed is measured using a speed sensor and is used as the input to the pitch and torque controller.

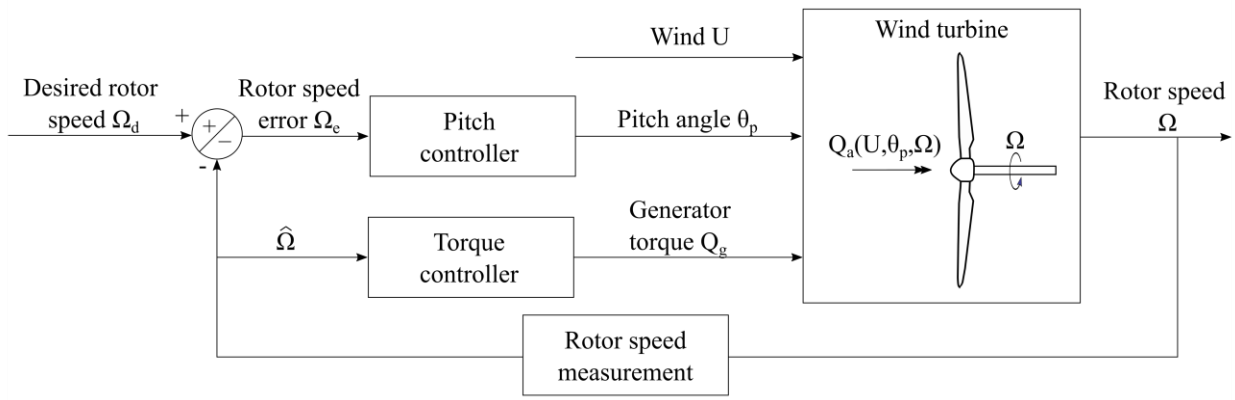

Figure 13 Illustration of dynamic control of pitch and generator torque based on the rotor speed.

9.3.2 Equation of motion of the drivetrain

An equation of motion of the drivetrain is needed for the rotational speed control of the turbine. The equation was introduced in Chapter 4 for a rigid and flexible shaft. The rigid shaft equation written on the low-speed-shaft (LSS) is given by:

15 $$J\dot{\Omega} = Q_a\left(U,\Omega,\theta_p\right) - Q_g\left(\Omega\right)$$

where J is the effective drivetrain inertia (rotor plus drivetrain), U is the wind speed, Ω is the rotor speed, $\dot{\Omega}$ is the rotor acceleration, θ_p is the pitch angle, Q_a is the aerodynamic torque and Q_g is the generator torque referred to the LSS. The effective inertia is obtained by combining the inertias of all the components of the drivetrain onto the LSS. Neglecting the gearbox and shaft inertias (unless these inertias are already included in the rotor inertia), the effective inertia may be obtained as:

(16) $$J = J_r + J_g = J_r + n_g^2 J_{g,HSS}$$

where J_r the rotor inertia, J_g is the generator inertia on the LSS, $J_{g,\mathrm{HSS}}$ is the generator inertia on the high-speed-shaft (HSS) and n_g is the gear ratio of the gearbox. The generator torque on the LSS is obtained from the generator torque on the HSS as follows:

(17) $$Q_g = \frac{n_g}{\eta} Q_{g,HSS}$$

Where η is the efficiency of the drivetrain, and $Q_{g,\mathrm{HSS}}$ is the generator torque on the HSS. Equation 15 will be used in Section 9.3.3 to obtain closed-loop equations that include the controller and the turbine dynamics.

9.3.3 Region 2 Control

9.3.3.1 Overview

In Region 2, the objective of the controller is to maximize power output. This is obtained by keeping the pitch angle and the tip-speed ratio to their optimum values. To achieve maximum power, a simple strategy consists of adjusting the generator torque to control the rotor speed and

maintaining an optimal tip-speed ratio as the wind speed changes. Modern controller may use PI-controllers (see Section 9.3.4), or more advanced strategies such as adaptive controllers. In the simple strategy for Region 2, the generator torque is set to be proportional to the square of the rotational speed the controller:

$$Q_{g,HSS} = K_g \Omega^2 \tag{18}$$

where $Q_{g,\mathrm{HSS}}$ is the generator torque on the high-speed shaft (HSS), and K_g is the proportional constant derived in a subsequent paragraph. An example of a generator torque curve as function of the rotor speed is given in Figure 14.

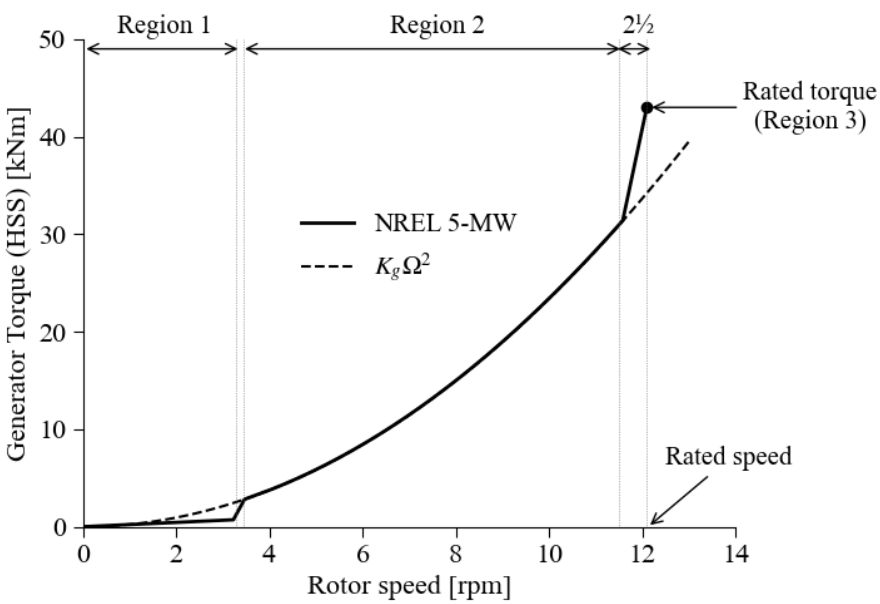

Figure 14 Generator torque versus rotor speed for the NREL 5-MW wind turbine with focus on Region 2 where the generator torque is a quadratic function of the rotor speed.

In Region 2, an increase of wind speed leads to an increase of aerodynamic torque, rotational speed, generator torque and power. An example of generator torque response in Region 2 is shown in Figure 15 for two cases: a wind step, and a gust. For the wind step, it is seen that the tip-speed ratio is indeed the same at the beginning and the end of the simulation despite the change of wind speed, which confirms that the generator torque response is such as to maintain a constant tip-speed ratio in Region 2. The generator torque response is observed to follow closely the rotor speed response. Indeed, the controller is implemented so as to follow Equation (18) quasi-instantaneously (a low pass filter is often employed). Despite the fast response of the generator torque to changes in rotor speed, there are transient regions where the tip-speed ratio is not constant, due to: 1) the drivetrain inertia which prevents the drivetrain from being in equilibrium instantaneously (see Equation 15), and 2) the delayed response of the aerodynamics due to dynamic inflow (see Chapter 3) which implies that the aerodynamic torque requires time before reaching a new equilibrium value. In this example, the large inertia of the rotor is the main contributor to the transient response. The aerodynamic torque increases abruptly after the wind

speed increases, but the large inertia leads to a progressive increase of the rotor speed, until a new equilibrium is reached on the drivetrain, following Equations 15 and (18).

Similar conclusions are drawn from the gust case. For a realistic wind field with turbulence, the tip-speed ratio in Region 2 will be close to the design values, but variations will be expected due to the delayed inertial and aerodynamic responses.

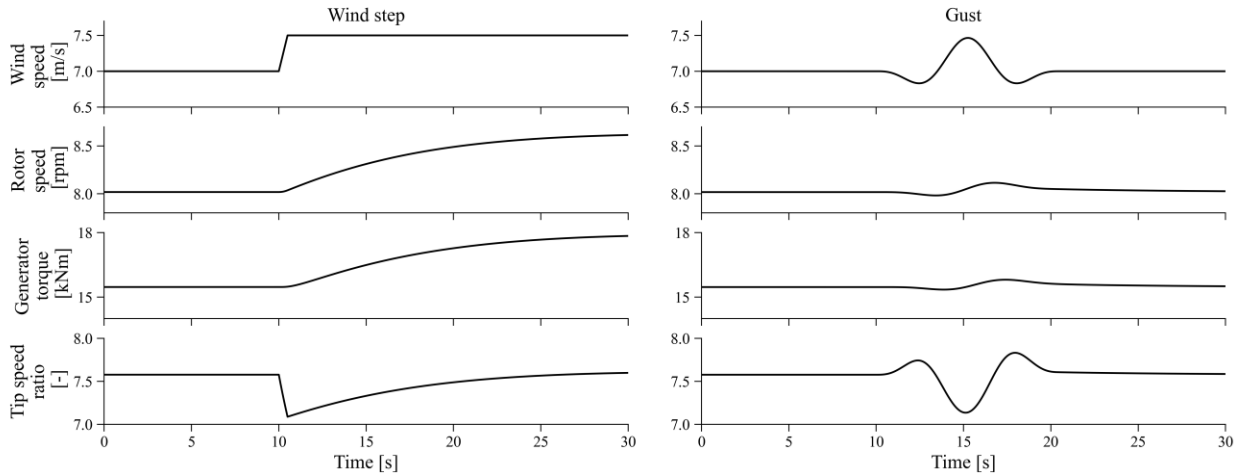

Figure 15 Rotor speed and generator torque responses in Region 2 to a wind step (left) and gust (right) for the NREL 5-MW wind turbine. The wind speed and tip-speed ratio is also shown on the graph.

9.3.3.2 Derivation of the proportionality constant in Region 2

The optimum pitch, $\theta_{p,opt}$, and the optimal tip-speed ratio, λ_{opt}, are usually chosen as the ones providing the maximum power coefficient. They are therefore defined as:

19 $$C_{p,max} = C_p\left(\theta_{p,opt}, \lambda_{opt}\right)$$

where C_P is the power coefficient. In Region 2, the generator torque is used to regulate the rotational speed so that λ stays at λ_{opt} over the range of wind speeds of this region.

If the controller successfully achieves the condition $\lambda \equiv \lambda_{\text{opt}}$, the aerodynamic power, P_a, is:

(20) $$P_{a,opt} = \frac{1}{2}\rho A U^3 C_P\left(\theta_{opt}, \lambda_{opt}\right)$$

The power is seen to be directly proportional to the cube of the wind speed. Similarly, the aerodynamic torque is proportional to the square of the rotational speed:

(21) $$Q_{a,opt} = \frac{P_{a,opt}}{\Omega} = \left[\frac{1}{2}\rho A \frac{R^3}{\lambda_{opt}^3} C_P\left(\theta_{opt}, \lambda_{opt}\right)\right]\Omega^2 = K_a \Omega^2$$

where K_{a} is the aerodynamic torque constant with dimension in $\frac{Nm}{\left(\frac{rad}{s}\right)^2}$. If the rotor's speed is given in RPM, the constant is $K_{\text{a,RPM}} = K_{\text{a}}\left(\frac{2\pi}{60}\right)^2$.

To achieve a torque balance on the shaft, the generator torque, Q_g, and the aerodynamic torque need to be in equilibrium on the LSS ($Q_g = Q_{a,opt}$), therefore:

(22) $$Q_g = K_a \Omega^2$$

Using Equation (17), the generator torque needed on the HSS is then:

(23) $$Q_{g,HSS} = \frac{\eta}{n_g} Q_g = \frac{\eta}{n_g} K_a \Omega^2 = K_g \Omega^2$$

where K_g is the generator torque constant.

The controller strategy in this region consists of setting the generator torque according to the above equation using the measured rotor speed as input. The torque command is usually filtered to avoid excessively rapid changes in the rotor speed.

The control diagram corresponding to the generator torque controller is illustrated in Figure 16. It is noted that Ω is the rotational speed of the LSS. If the rotational speed is the rotational speed of the HSS, then the proportionality constant needs to be divided by n_g^2.

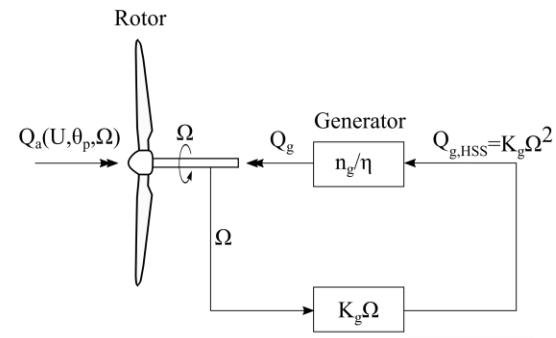

Figure 16 Control diagram in Region 2 for the regulation of the rotor speed using the generator torque.

The closed-loop equation of the controller in Region 2 is therefore obtained by inserting the expression for the generator torque, Equation (22), into the equation of motion of the drivetrain, Equation 15.

(24) $$J\dot{\Omega} = \frac{1}{2}\rho A R^3 \left[\frac{1}{\lambda^3} C_P(\theta,\lambda) - \frac{1}{\lambda_{opt}^3} C_P\left(\theta_{opt},\lambda_{opt}\right)\right]\Omega^2$$

Example For the NREL 5-MW, $\lambda_{\text{opt}} = 7.65$, $C_{P,\text{opt}} = 0.48$, $\rho = 1.225$, we obtain $K_{\text{a}} = 0.002R^5$ and $K_g \approx 21{,}300\ \frac{Nm}{\left(\frac{rad}{s}\right)^2} = 233.6\ \frac{Nm}{(RPM)^2}$.

9.3.4 Region 3 Control

9.3.4.1 Overview

In Region 3, the controller strategy consists of using the pitch mechanism to maintain the rotor speed constant and use the generator torque to regulate the power. The reason for limiting the power output in this region is to limit the loads and limit the generator size (and therefore limit the cost). As a rule of thumb, the power is equal to the product of the thrust force times the wind speed. Therefore, a constant power will lead to decreasing thrust values for increasing wind speeds and a reduction of loads at higher wind speeds, which can be translated into cost reduction (less material needed to withstand high loads). Generator sizes and costs scale with the maximum power output supported by the generator. Because the probability of high wind speeds is relatively low, diminishing financial returns will be obtained by increasing the generator rating. High wind speeds are not frequent enough to justify a machine strong enough to harvest as much wind energy as possible. This justifies the choice of constant power in Region 3. Keeping the rotational speed constant in Region 3, helps the control of average power (and avoid sudden dips in power).

The generator torque control in Region 3 is described in Section 9.3.4.2; it is achieved either using a constant power strategy or a constant torque strategy.

A common way to implement the pitching strategy for rotor speed regulation of Region 3 is to use a PI-controller (see Section 9.2.5) which takes as input the error of the rotor speed and returns the desired pitch angle to reach the objective of constant rotational speed:

$$\Delta\theta_p = K_P \Delta\Omega + K_I \int_0^t \Delta\Omega \, dt \tag{25}$$

where $\Delta\Omega = \Omega - \Omega_0$, with Ω_0 the rated rotational speed, and where K_P and K_I are the proportional and integral gains, which can be obtained using the developments of Section 9.3.4.3. The PI-controller is used to drive the rotor speed error to zero, and therefore achieve the constant rotor speed objective.. A control diagram of the PI pitch controller expressed in Equation (25) is shown in Figure 17.

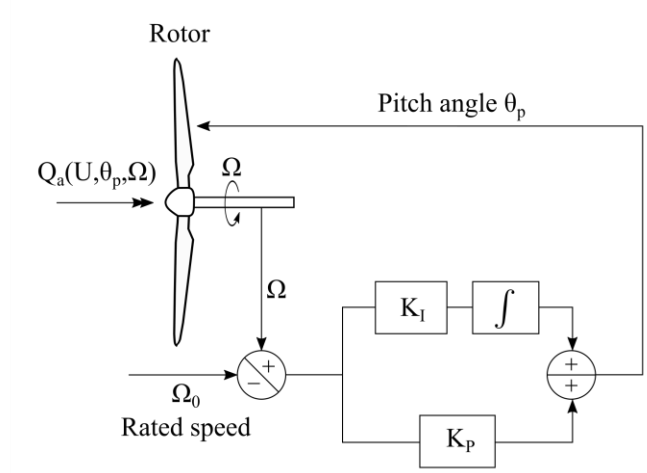

Figure 17 Control diagram for a PI-controller used in Region 3 to regulate the rotor speed using the pitch actuator.

As previously discussed, most wind turbines use a "pitch to feather" strategy, meaning that the pitch angle is set to increase when the wind speed increases. The main reason is that pitching to feather reduces the angle of attack, and therefore, this strategy avoids stall. Stall can induce vibrations on the blades, and sudden drops of loading, which are best to avoid. If the wind speed increases while the pitch is held constant, the angle of attack will increase, leading to increased aerodynamic torque, and therefore an increase in rotational speed. Pitching the blade to feather will reduce the angle of attack, thereby reducing the aerodynamic torque and so the rotational speed. The value K_P is therefore positive in a pitch-to-feather strategy. We note that some authors use an opposite convention for $\Delta\Omega$, or, introduce negative signs in front of K_P and K_I in Equation (25) (this is the case for the ROSCO controller, see e.g. Abbas *et al*. 2022), in which case the gains have opposite signs.

In Section 9.3.4.3, below, the closed-loop equations (equations combining the controller and drivetrain response) are derived and expressions for the gains of the controller are obtained. It will be seen that the gains need to be adjusted ("scheduled"), so that they decrease as the wind speed increases. Indeed, the aerodynamic forces are proportional to the square of the relative wind velocity, so the aerodynamic forces become more sensitive to changes in pitch as the wind speed increases. Said differently, smaller changes in pitch angles are required to get the same changes in torque. It will also be seen that the closed-loop system behaves as a second order system. Therefore, a frequency and damping can be associated with the system response, which are a function of the gains of the controller. The tuning of the gains can lead to different responses (slow, fast, highly-damped or poorly damped). This behavior is illustrated in Figure 18 where the pitch and rotor speed responses to a wind step are plotted for the NREL 5-MW. Changing K_P or K_I influences the damping and frequencies of the responses (the relationships between damping, frequencies and the gains are found in Section 9.3.4.3). See also Section 9.2.5.

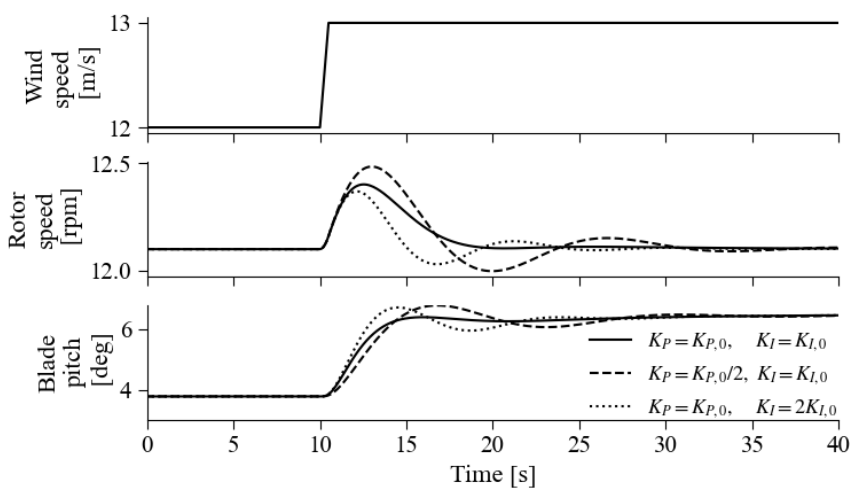

Figure 18 Pitch and rotor speed responses to a step of wind speed in Region 3 for the NREL 5-MW wind turbine, and for different values of the proportional and integral gains (K_P and K_I) The generator torque is kept constant here.

9.3.4.2 Generator Torque Control Strategies in Region 3

The limitation of power output in Region 3 is achieved using a constant power strategy or a constant torque strategy. In the constant power strategy, the generator torque (referred to the LSS) is obtained as:

(26) $$Q_g = \frac{n_g}{\eta} Q_{g,HSS} = \frac{n_g}{\eta} \frac{P_O}{n_g \Omega} = \frac{1}{\eta} \frac{P_O}{\Omega}$$

where P_0 is the operating point (rated) power, η the efficiency of the drivetrain, and n_g is the gear ratio of the gearbox. From Equation (26), it is seen that if the rotor speed increases, the generator torque will drop, thereby ensuring a constant power value.

In the constant torque strategy, as indicated by its name, the generator torque is kept constant to its rated value:

(27) $$Q_g = Q_{g,0} = \frac{1}{\eta} \frac{P_0}{\Omega_0} \qquad Q_g = Q_{g,O} = \frac{1}{\eta} \frac{P_O}{\Omega_O}$$

where Ω_0 is the operating point (rated) rotational speed of the LSS.

The constant power strategy is effective at keeping a constant power because the power electronics of the generator can rapidly change the generator torque and respond rapidly to changes of rotational speed. The second strategy can lead to large power fluctuations. More advanced control strategies may use a PI-controller. The control diagrams of three different control strategies are illustrated in Figure 19.

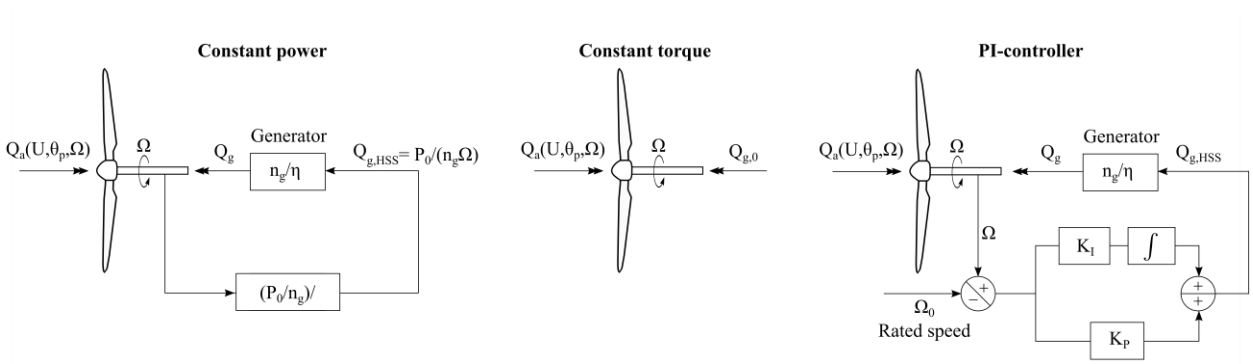

Figure 19 Control diagram in Region 3 for three generator torque control strategies. Left: constant power. Center: constant torque. Right: PI-controller.

*9.3.4.3 *Closed-loop Equations for the Pitch Controller*

To obtain the closed-loop equations of the pitch controller, first, the equation of motion of the system is linearized, then, the equation for the PI-controller is inserted into the linearized equation.

Open-loop Linearized Drivetrain Equation of Motion

The controller takes as input the error in rotational speed, denoted $\Delta\Omega$, with:

(28) $\Delta\Omega = \Omega - \Omega_0$

where Ω_0 is the rated rotational speed. To introduce the error into the equation of motion, one needs to linearize the drivetrain equation (Equation 15). A simple way to achieve this consists of performing a Taylor expansion of all the terms. The variables are expressed as function of the operating point values (e.g., the rated values) and small variations: $\Omega = \Omega_0 + \Delta\Omega$, $U = U_0 + \Delta U$, $\theta = \theta_{p,0} + \Delta\theta_p$.The terms of Equation (3) are then expressed using a first order Taylor expansion:

(29)
$$\begin{aligned} Q_a(U,\Omega,\theta_p) &= Q_a|_0 + \left.\frac{\partial Q_a}{\partial U}\right|_0 \Delta U + \left.\frac{\partial Q_a}{\partial \Omega}\right|_0 \Delta\Omega + \left.\frac{\partial Q_a}{\partial \theta_p}\right|_0 \Delta\theta_p \\ Q_g(\Omega) &= Q_g\big|_0 + \left.\frac{\partial Q_g}{\partial \Omega}\right|_0 \Delta\Omega \end{aligned}$$

At the operating point, the drivetrain is assumed to be in equilibrium (i.e., at a constant rotor speed, $\dot{\Omega}_0 = 0$). Therefore, the zero-order terms satisfy the following equation of motion:

(30) $J\,\dot{\Omega}_0 = Q_a|_0 - Q_g\big|_0 = 0$

which states that the aerodynamic and generator torque are in balance. The notation $|_0$ will be further dropped for conciseness. Inserting the linear expansion of each term into the drivetrain equation of motion, and using $\dot{\Omega} = \dot{\Omega}_0 + \Delta\dot{\Omega} = \Delta\dot{\Omega}$, leads to:

(31)
$$J\Delta\dot{\Omega} + \left[-\frac{\partial Q_a}{\partial \Omega} + \frac{\partial Q_g}{\partial \Omega}\right]\Delta\Omega - \frac{\partial Q_a}{\partial U}\Delta U - \frac{\partial Q_a}{\partial \theta_p} = 0$$

The partial derivatives present in this equation can be obtained numerically or analytically, as will be discussed later in this section.

Closed-loop Linearized Drivetrain Equation of Motion

A PI-controller is used to obtain the pitch angle based on the error in rotor speed, therefore:

(32)
$$\Delta\theta_p = K_P\Delta\Omega + K_I\int_0^t \Delta\Omega\, dt = K_P\dot{\varphi} + K_I\varphi$$

where the intermediate variable φ is introduced for convenience, defined as:

(33) $\varphi = \int_0^t (\Omega - \Omega_0)\, dt, \quad \dot{\varphi} = \Delta\Omega, \quad \ddot{\varphi} = \Delta\dot{\Omega}$

The closed loop equation of motion, containing the action of the controller, is obtained by inserting Equation (32) into Equation (31), leading to:

(34) $J\ddot{\varphi} + \left[-\frac{\partial Q_a}{\partial \Omega} - \frac{\partial Q_a}{\partial \theta_p}K_P + \frac{\partial Q_g}{\partial \Omega}\right]\dot{\varphi} - \frac{\partial Q_a}{\partial \theta_p}K_I\varphi - \frac{\partial Q_a}{\partial U}\Delta U = 0$

It is common to assume that the variation of aerodynamic torque with wind speed and rotor speed, close to the operating point, can be neglected. Therefore, Equation (34) reduces to:

(35) $J\ddot{\varphi} + \left[-\frac{\partial Q_a}{\partial \theta_p}K_P + \frac{\partial Q_g}{\partial \Omega}\right]\dot{\varphi} - \frac{\partial Q_a}{\partial \theta_p}K_I\varphi = 0$

In Region 3, $\frac{\partial Q_a}{\partial \theta_p} < 0$, therefore, if $K_P > 0$ (pitch to feather), then the term $-\frac{\partial Q_a}{\partial \theta_p} K_P$ adds damping to the drivetrain. The term $\frac{\partial Q_g}{\partial \Omega}$ is either negative or zero, which means that it can potentially introduce negative damping which needs to be balanced by the proportional term to make the system stable. If $k_I > 0$, the term $-\frac{\partial Q_a}{\partial \theta_p} K_I$ provides restoring stiffness to the system. Equation (35) is a second order differential equation, which can be rewritten:

(36) $$M_\varphi \ddot{\varphi} + C_\varphi \dot{\varphi} + K_\varphi \varphi = 0$$

where the inertial, damping and stiffness terms are directly identified from Equation (36). The natural frequency and damping ratio associated with this equation can be computed as:

(37) $$\omega_\varphi = \sqrt{\frac{K_\varphi}{M_\varphi}}, \qquad \zeta_\varphi = \frac{C_\varphi}{2\sqrt{M_\varphi K_\varphi}}$$

Hansen *et al.* (2005) suggest using the following values to obtain acceptable responses:

(38) $$\omega_\varphi \approx 0.6 \text{ rad/s}, \qquad \zeta_\varphi = 0.6\text{–}0.7$$

From an *a priori* knowledge of the frequency and damping coefficient, it is possible to obtain the values of the gains K_P and K_I, as will be detailed in the next paragraph. As mentioned earlier, the fact use of gains that vary with the operating conditions is referred to as gain scheduling.

*9.3.4.4 *Gain Scheduling of the Pitch Controller*

The gains of the pitch controller can be identified from the frequency and damping using Equation (37) and the definitions of M_φ, K_φ and C_φ as follows:

(39) $$K_P = \frac{2\zeta_\varphi \omega_\varphi J - \left.\frac{\partial Q_g}{\partial \Omega}\right|_0}{\left.\frac{\partial Q_a}{\partial \theta_p}\right|_0}$$

(40) $$K_I = \frac{\omega_\varphi^2 J}{-\left.\frac{\partial Q_a}{\partial \theta_p}\right|_0}$$

where the $|_0$ has been reintroduced. The term $\left.\frac{\partial Q_a}{\partial \Omega}\right|_0$ varies with wind speed, rotor speed and pitch; therefore, the controller needs to adapt the value of K_P and K_I continuously, a process referred to as gain scheduling.

Gain scheduling is required because a wind turbine is a nonlinear system, which responds differently at different operating conditions, whereas a PI-controller is based on a linear model that is only applicable within a certain operational range (see Bianchi *et al.*, 2007 for more details).

The term $-\left.\frac{\partial Q_g}{\partial \Omega}\right|_0$ is obtained as follows, depending on the control strategy:

(41) $$\left.\frac{\partial Q_g}{\partial \Omega}\right|_0 = \begin{cases} 0, & \text{Constant generator torque strategy} \\ -\frac{1}{\eta}\frac{P_0}{\Omega_0^2}, & \text{Constant power strategy} \end{cases}$$

For the constant power strategy, the generator torque (on the LSS) is given by Equation (26). Therefore, the Taylor series expansion of the generator torque is:

(42) $$Q_g = \frac{1}{\eta}\frac{P_O}{\Omega_O} - \frac{1}{\eta}\frac{P_O}{\Omega_O^2}\Delta\Omega$$

For the constant torque strategy, the torque is $Q_g = \frac{1}{\eta}\frac{P_0}{\Omega_0}$, and the derivative with respect to Ω is zero.

The sensitivity of the aerodynamic torque with respect to the pitch, $\left.\frac{\partial Q_a}{\partial \theta_p}\right|_0$, is can be computed numerically using an unsteady BEM code (see Chapter 3). For each wind speed above rated, one needs to find the pitch angle such that the turbine produces the desired rated power, while the rotational speed is kept constant at the rated value. An iterative procedure may be used to find this pitch angle. Once the reference pitch angle is found for each wind speed, the rate of change $\left.\frac{\partial Q_a}{\partial \theta_p}\right|_0$ can be determined in two ways: either by performing linearization using a dedicated tool (such as the *OpenFAST* linearization functionality), or by computing the slope numerically when running an unsteady BEM simulation where a sudden pitch change is introduced. When computing the rate of change using a BEM code and finite differences (for instance computing the torque at two pitch angles surrounding the operating point value), it is important that the induction values from the BEM algorithm do not "jump" between two steady state values but instead, that the induced velocities are kept constant and equal to the values at the operating point. This is referred to as the "Frozen Wake" assumption. Alternatively, if a dynamic inflow model is available, such a model should be used, as it will ensure that the inductions close to the operating point vary smoothly.

By plotting $\left.\frac{\partial Q_a}{\partial \theta_p}\right|_0$ as function of θ_p, a quasi-linear relationship is obtained. The torque rate is then modelled as follows:

(43) $$\left.\frac{\partial Q_a}{\partial \theta_p}\right|_0 (\theta) = \frac{\partial Q_a}{\partial \theta_p}(\theta_p = 0)\left[1 + \frac{\theta_p}{\theta_K}\right]$$

where θ_k is a parameter which can be obtained by performing a linear fit to the data. Using this model, and neglecting $-\left.\frac{\partial Q_g}{\partial \Omega}\right|_0$, the gain scheduling (continuous adaptation of the gains) can be obtained as follows:

(44) $$K_P = \frac{2\zeta_\varphi \omega_\varphi J}{\left.\frac{\partial Q_a}{\partial \theta_p}\right|_0 (\theta_p = 0)} GK(\theta_p)$$

(45) $$K_I = \frac{\omega_\varphi^2 J}{-\left.\frac{\partial Q_a}{\partial \theta_p}\right|_0 (\theta_p = 0)} GK(\theta_p)$$

where $GK\left(\theta_p\right)$ is the gain-correction factor, defined as:

(46) $$GK(\theta_p) = \left[1 + \frac{\theta_p}{\theta_k}\right]$$

In the literature, some authors use the rate of change of the aerodynamic power with respect to the pitch angle, $\left.\frac{\partial P_a}{\partial \theta_p}\right|_0$. Considering only the variation in pitch, the Taylor expansion of the aerodynamic torque can be obtained as:

(47) $$Q_a = Q_a|_0 + \frac{\partial Q_a}{\partial \theta_p}\Delta\theta_p = \frac{P_{a,0}}{\Omega_0} + \left.\frac{1}{\Omega_0}\frac{\partial P_a}{\partial \theta_p}\right|_0 \Delta\theta_p$$

The rates are then directly related by the rated rotor speed:

(48) $$\left.\frac{\partial Q_a}{\partial \theta_p}\right|_0 = \left.\frac{1}{\Omega_0}\frac{\partial P_a}{\partial \theta_p}\right|_0$$

The constant θ_k is the same whether the aerodynamic power or torque is used to determine the gain scheduling. We recall that if an opposite convention is used for $\Delta\Omega$ then the gains will have an opposite sign (this is the case for the ROSCO controller). An example of gain scheduling for the NREL 5-MW, obtained using the ROSCO toolbox is shown in Figure 20.

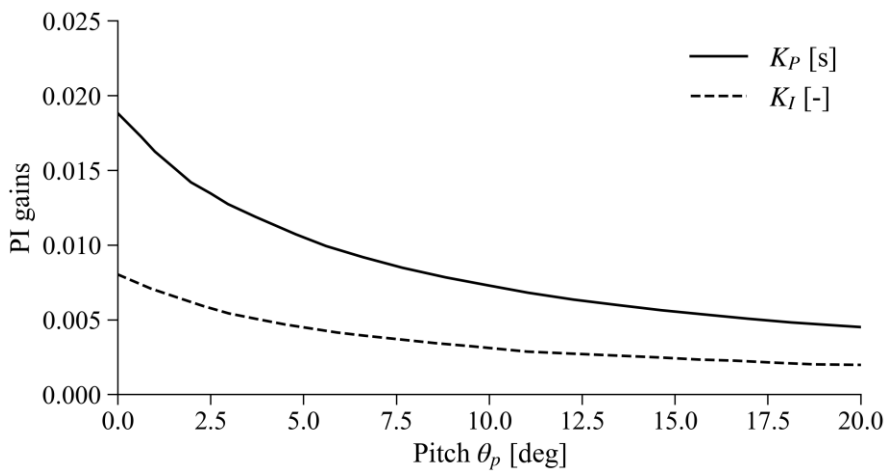

Figure 20 Gain scheduling (functions $K_P(\theta)$ and $K_I(\theta)$) for the pitch PI-controller of the NREL 5-MW wind turbine in Region 3.

9.3.5 Region Matching

As discussed in Section 9.3.1, intermediate regions are present between the main control regions. Region matching refers to the design of a control system which smoothly transitions from one main region to the next. Of the different transition regions, Region 2½ is the one that requires the most attention. As shown in Figure 14 the generator torque increases rapidly in this region and the generator torque is often directly proportional to the rotor speed. The linear slope is sometimes

called generator slip in reference to how conventional (squirrel cage) induction generators work (see Chapter 5). Because of the steep slope of the generator torque, a small drop in rotor speed will result in a large drop of generator torque, which can lead to significant drop in power. This is mainly an issue when the turbine is operating in Region 3 and a drop of rotor speed occurs due to a gust or turbulence. This region is also the region where the thrust (and other loads) are the largest; therefore maximum structural damage is likely to occur during this transition. Different algorithms are implemented in Region 3 to prevent sudden switch from Region 3 to Region 2. A simple option is to keep the generator torque at its maximum value as long as a positive pitch angle is present (indicating that the turbine is in Region 3), even if the rotor speed drops below its rated value.

9.3.6 Example Behaviors

Examples of the steady state response of the NREL 5-MW wind turbine were shown previously in Figure 12. The results of a dynamic simulation of the NREL 5-MW turbine using *OpenFAST* in turbulent winds in different regions are given in Figure 21 through Figure 23.

Results for Region 2, with a mean wind speed of 7 m/s are shown in Figure 21. In this region, the rotor speed is seen to respond slowly to the changes of wind speed, only the generator torque control is active, and it follows the rotational speed.

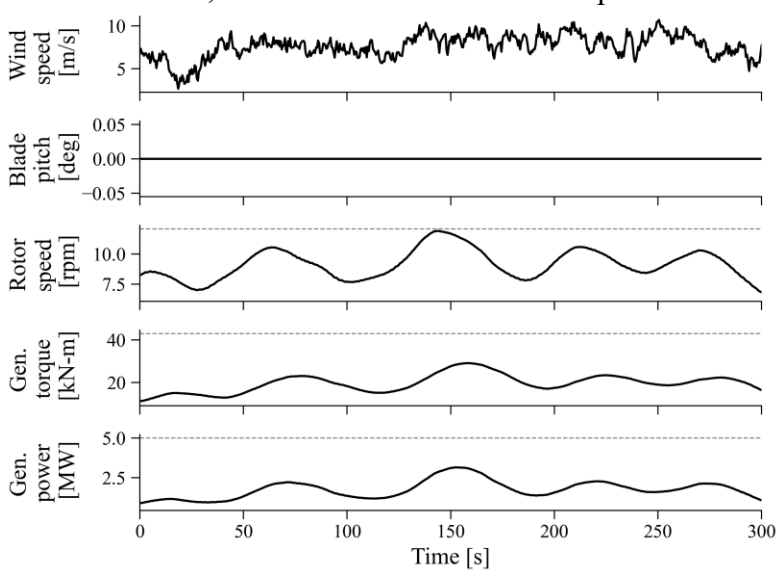

Figure 21 Example of dynamic response of the NREL 5-MW in Region 2 for a turbulent wind simulation with mean speed 7m/s.

Results corresponding to Regions 2½ and 3 are shown in Figure 22, for a mean wind speed of 11 m/s. It can be seen that active pitch is used to regulate the rotational speed when the wind speed is sufficiently large (Region 3). At times, the rotor speed and power drops, and the pitch control is no longer active (Region 2½ and 2).

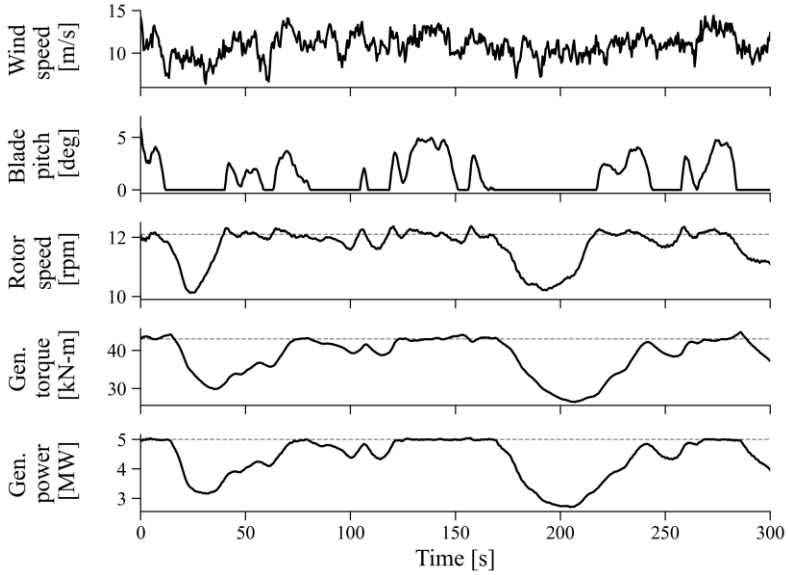

Figure 22 Example of dynamic response of the NREL 5-MW in Region 2.5 and 3 for a turbulent wind simulation with mean speed 11m/s. Rated values are indicated with a horizonal dashed lines.

Results for Region 3 only are shown in Figure 23, for a mean wind speed of 13 m/s. As can be seen in this simulation, the generator torque and blade pitch are controlled to regulate the generator power around its rated value of 5 MW and the rotational speed around the rated value of 12.1 rpm.

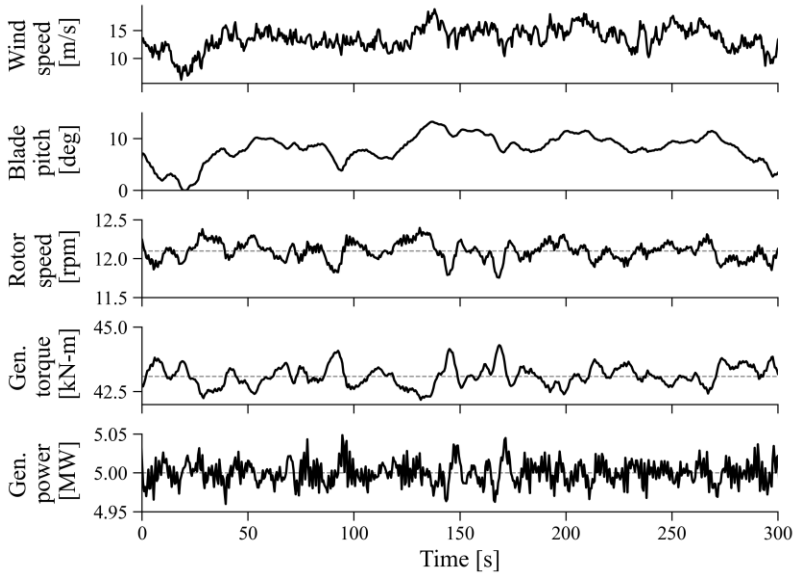

Figure 23 Example of dynamic response of the NREL 5-MW in Region 3 for a turbulent wind simulation with mean speed 13m/s. Rated values are indicated with a horizonal dashed lines.

9.4 *Advanced Control Strategies

The methods presented in Section 9.3 are basic control strategies used to regulate the power and rotational speed of a wind turbine. Nowadays, manufacturers rely on more advanced strategies to improve the power quality and employ a wide range of methods to control and reduce the loads on

the wind turbine. The underlying implementation of controllers are highly protected by manufacturers and typically inaccessible to the community. Therefore, only the main features and strategies are presented in this section, without detailing the implementation.

9.4.1 Thrust Peak Shaving

Peak shaving of thrust (or thrust limiting) is a control strategy used in Region 2½, which is the region where the aerodynamic thrust is at its largest and the change of thrust with wind speed is large. Without special care, major loads may occur in this region, in particular at the tower base. Pitching can be introduced in this region to reduce the thrust force and transition progressively to Region 3, at the expense of a slight power loss. An example of this strategy consists of introducing a minimum blade pitch angle in this region (see Abbas *et al.*, 2022). An illustration of the pitch-shaving strategy is given in Figure 24.

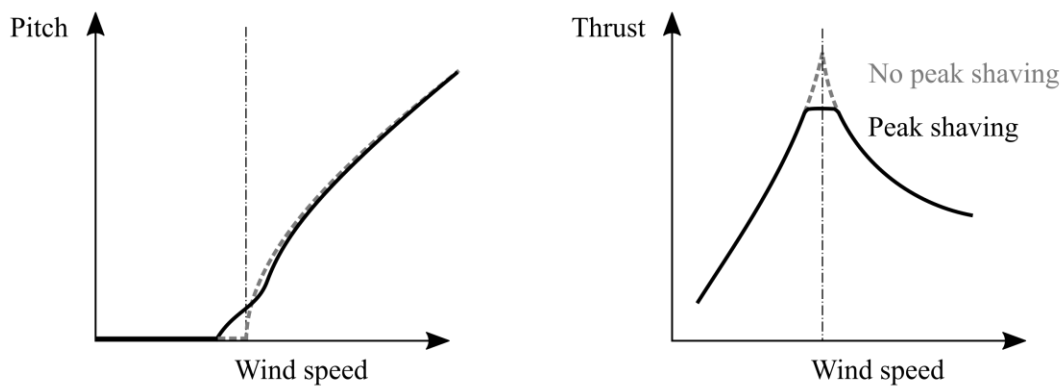

Figure 24 Illustration of thrust shaving using adaptative pitch scheduling around the rated wind speed to minimize the thrust loads

9.4.2 Speed Constraints in Region 2

In Region 2, the controller may need to introduce constraints to avoid certain rotational speeds. This can be the case if the cut-in speed of the generator requires a minimum speed that is above the optimal speed at low wind speed. In this case, pitch scheduling may be used to achieve maximum power extraction at low wind speed and at sub-optimal tip-speed ratios (due to the rotational speed constraint). This situation is illustrated in the left of Figure 25.

In Region 2, the optimal rotational speed may coincide with natural frequencies of the wind turbine, which can lead to resonance issues during a certain range of wind speed. This is often the case for the side-side mode of the tower which has typically low damping and can be excited by small mass or pitch imbalances of the rotor. To avoid resonance, which can lower the structural lifespan of the turbine (see Chapter 8), the controller may adopt a strategy which avoids the rotational speeds that correspond to the tower frequencies. This is illustrated in the right of Figure 25.

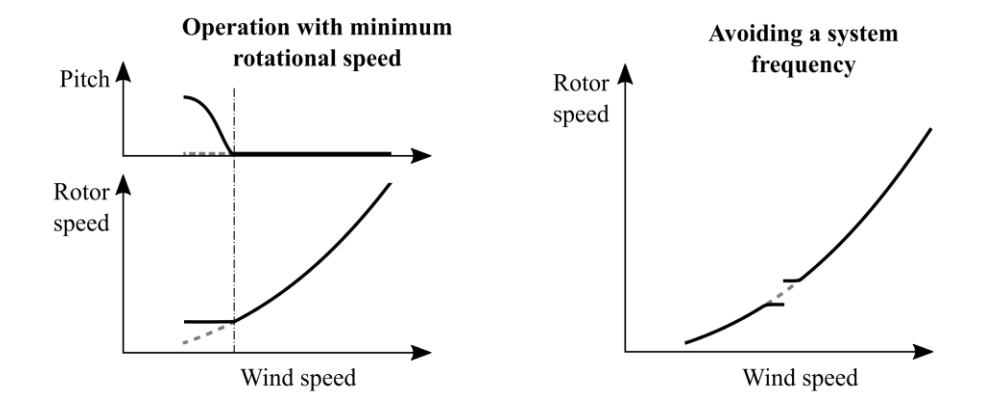

Figure 25 Strategies to mitigate the potential constraints on the rotational speed in Region 2. Left: minimumrotational speed. Right: avoiding a system frequency.

9.4.3 Controlling Structural Vibrations

As discussed in Chapter 4, wind turbines consist of long lightly damped members that vibrate and operate in an environment in which turbulence, gusts, wind shear, tower shadow, and dynamic effects from other turbine components can excite vibrations. Structural vibrations of the turbine can have a drastic impact on the lifetime of the system. Structural damping is typically low and will only provide limited attenuation. The external loads may provide some damping (such as the aerodynamic and hydrodynamic forces) but this damping is often limited to some direction of motions (e.g. fore-aft or flap motion), and only present when the external forces are present (e.g., aerodynamic damping becomes negligible at standstill). Therefore, dedicated control strategies of additional devices are often needed to avoid excessive vibrations of the structure.

9.4.3.1 Controlling Tower Vibrations

Changes in blade pitch have a significant effect on the rotor thrust, which excites tower vibrations. Tower vibrations (and therefore translations of the rotor back and forth) affect the relative wind speed seen by the blades and, thereby, the rotor torque. This feedback path between tower and pitch system is strong enough that careful controller design is needed to avoid exacerbating tower vibrations or making a pitch control system that is completely unstable (Bossanyi, 2003). One approach is to use a filter tuned to the tower vibration frequency that shifts the phase of any control actions at that frequency and effectively damps the tower vibrations. Another approach uses the signal from a tower accelerometer as an input to the control system and to the tower damping algorithm. Alternatively, active or passive tuned-mass-dampers system may be installed in the tower to damp the tower vibrations (see Section 9.4.3.3). Such approaches have been shown to be very effective at damping the excitation of the first tower vibration mode. When implementing this approach, however, care must be taken to ensure that the two control goals of the pitch control system, control of aerodynamic torque and reduction of loads, do not conflict, thereby degrading the efforts to achieve both goals.

9.4.3.2 Controlling Drivetrain Vibrations

In constant-speed wind turbines with conventional induction generators, the generator slip provides a significant amount of damping of drivetrain oscillations. In variable-speed wind turbines, when the torque of the generator is fixed, there is very little damping in the drivetrain, which acts like two large masses (the generator and the rotor) on a flexible shaft. The first collective rotor torsional vibration mode may act like an additional inertial mass connected to the

hub by a torsional spring. Finally, if the second side-to-side tower vibration mode is excited (which causes angular displacements at the top of the tower), this can add additional rotational oscillations to the system. If left undamped, these can lead to large torque oscillations in the gearbox (Bossanyi, 2003). One approach to controlling drivetrain torsional vibrations is the use of bandpass filters that effectively add small torque ripples to the drivetrain of a magnitude and phase that cancel out the vibrations excited by the other turbine dynamics.

9.4.3.3 Additional Structural Dampers

Active or passive structure dampers are often placed in the tower, nacelle, floating platform, and can potentially be placed in the blades to and reduce the vibrations of these components. Out of the many technologies available, tuned mass dampers (TMD) and tuned liquid column dampers (TLCD) are among the most common. The structural dampers are usually tuned to damp a given frequency of the system, typically the first fore-aft mode of the turbine. A characteristic of structural dampers is that they typically introduce a frequency split that will introduce two frequencies on both sides of the target frequency. The deployment of structural dampers can drastically reduce vibrations, and they are particularly relevant to reduce the fatigue occurring during standstill in offshore wind plants (Stewart and Lackner, 2013 or Brodersen *et al.,* 2017).

9.4.4 Individual Pitch Control

The control systems described in the previous sections assume that the blades are pitched similarly, either collectively or cyclically (as a function of azimuth angle). Individual Pitch Control (IPC) consists of pitching each blade independently, allowing the turbine to respond to asymmetric loads caused by wind shear across the rotor, turbulence, soiling of a blade, etc. (for example, see Geyler and Caselitz, 2007; Bossanyi, 2003). It offers additional possibilities for load reduction, but requires more complicated control algorithms, faster processors, and some measure of asymmetrical rotor loads. Loads that might be useful as control inputs are blade root bending moments, shaft bending moments, or yaw bearing moments, but typical strain gauges have not been robust enough for this type of application. Recent advances in optical and solid state strain gauges make individual pitch control more feasible. Some of the most effective approaches to individual pitch control transform the asymmetric loading into a mean load and loads in two orthogonal directions. Fairly simple control algorithms can then be used to determine control actions in this new coordinate system. These are then transformed back into control commands for each of the blade pitch actuators. This approach has been shown to provide significant additional load reduction over collective pitch control.

As wind turbines increase in size, the changes in wind speed and direction across the rotor increase proportionally. Additionally, large wind turbines operate within regions of the upper atmospheric boundary layer where organized, coherent turbulent structures and low-level jets may occur. These conditions may increase fatigue damage significantly (Hand *et al.*, 2006). An example of the use of individual blade pitch actuation for load mitigation due to large, coherent vortices in the atmosphere is described in Hand and Balas (2007). The authors showed that, with adequate sensors and models for the structure of atmospheric vortices, blade root bending moments could be reduced by 30%.

9.4.5 Smart Rotors

Smart rotors refer to technologies applied to the blades to control the aerodynamical forces on the blades to provide fast response to load changes. Indeed, the pitch control has a slow response rate and the generator torque control (which is fast) acts on the entire rotor and not on individual blades. Smart rotor technologies are also called distributed control devices because they are placed at key locations along the blades. Aerodynamic control devices change the aerodynamic properties of the blades. Example of concepts (illustrated in Figure 26) are:

- **Flaps**. Usually located at the trailing edge of the airfoil, the flaps affect the shape of the airfoil, and therefore the pressure distribution and the lift and drag force. The flaps can either be rigid (similar to airplane flaps), or deformable.

- **Microtabs**. Microtabs are small devices that can deploy continuously in the direction normal to the surface of the airfoil and are typically placed towards the trailing edge. The device affects the flow near the trailing edge of the airfoil and effectively changes the camber of the airfoil. Decrease of lift is achieved by deploying microtabs on the suction side of the airfoil and increase of lift is achieved using microtabs on the pressure side.

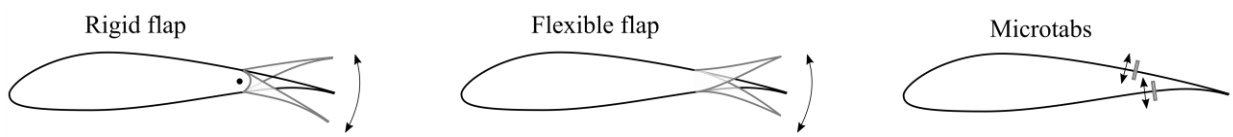

Figure 26 Examples of smart rotor concepts used to locally control the aerodynamics of the blade.

Other technologies include: camber control (where the shape of the airfoil is changed) and boundary layer control (using suction methods, jets, active vortex generators or plasma actuators). In general, distributed aerodynamic controls have high response rate but low control authority as their effect is localized. To effectively integrate such technologies, sensing is required to be able to control the device and have the desired load mitigation behavior. Measurements on the blades would be the best for such purpose, but they are more difficult to implement than in the nacelle and can be more expensive. Reliability of the actuator is also critical because any replacement would have significant cost as they are difficult to access. Active smart rotor technologies require power to function and therefore, a compromise between load mitigation and power consumption needs to be reached. The reader is referred to Barlas and Van Kuik (2007) for a review of smart rotor technologies.

9.4.6 Frequency Control And Grid Integration

In order to provide electricity that is of sufficient quality to be used in the grid (see Chapter 12), the wind turbine controller uses advanced power electronics to regulate the frequency and amplitude of the power output. As more and more wind turbines are integrated on the grid, a new branch of control is emerging in which the wind turbines are used to answer the needs of the utility grid. The wind turbines can be used to actively control the overall power output of a wind plant in order to meet the power needs of the grid and contribute to the frequency regulation of the grid. Grid operators indeed need to constantly balance the generation and loads on the grid to ensure that the grid frequency remains stable. Wind turbines can provide a fast response to the grid need,

and in contrast to conventional power plants, they can switch from 0% to 100% capacity with low inertia and a fast response time (as long as the wind resource allows it). Wind plants can therefore provide a contingency reserve. For instance, they can be downregulated (set to produce less than the nominal power), so that, when needed, they can provide a quick response to an increase of load on the grid by increasing their power production to nominal. Similarly, wind turbines can potentially provide fast-frequency response, detecting changes of frequency in the grid automatically and adapting their response without a need for an operator. The topic of frequency control and grid integration is a topic of active research (see Andersson *et al*., 2021).

9.4.7 Signal Processing and Filtering

An important aspect of modern control consists of filtering and synchronizing the signals from the various sensors and actuators on the turbine. Different sensors may have various levels of noise, biases, or may be come unavailable for indeterminate periods of time. A typical signal processing tool uses low-pass or high-pass filters to eliminate some range of frequencies. Excessive filtering may nevertheless introduce lags in the signals, which can be counterproductive and prevent the controller from responding in a timely manner. Signal processing is required to ensure a continuous and reliable response from the controller. Signal processing techniques are beyond the scope of this text, but they are an important aspect of the design of modern wind turbine controllers.

9.4.8 Lidar Feedforward

Long-range lidar systems can be used to forecast the production of a wind turbine, which can potentially be used to accommodate the energy market and plan a strategy that is economically advantageous (for instance, providing a contingency reserve to the grid). Short range lidars can measure the incoming wind seconds before its arrival at the turbine and adjust the control strategy accordingly. For instance, the system may detect an incoming gust and start pitching the blades in anticipation to reduce the load response. Lidar technologies remain currently too expensive to be deployed systematically, but more and more research is being undertaken to use lidar measurements as part of the control system (see e.g., Sholbrock *et al.*, 2016).

9.4.9 Control of Floating Systems

Floating wind turbines (see Chapter 11) require different control systems than onshore or fixed-bottom turbines. A common issue observed for spars and semi-submersibles is the negative damping of the platform pitch motion which occurs above rated conditions. This issue can be explained as follows: when the platform pitches upwind, the relative wind speed increases, which increases the rotor loads and therefore the rotor speed. This will lead the blade pitch controller to increase the blade pitch angle so as to maintain a constant rotational speed. This results in a decrease of the thrust force, and therefore, the platform will pitch upwind even more. The opposite occurs if the platform pitches downwind. In that case, the controller is seen to introduce negative damping into the system. The pitching frequency of the platform, which is usually relatively slow, is therefore an integral part of the design of a floating turbine's controller. Wind and wave loading can cause sizable platform motions for a floating system, and dedicated control strategies are

required to mitigate the motions and loads. The reader is referred to Ha *et al.* (2021) for an example control strategy.

9.4.10 Wind Farm Control

Control of wind farms (see Chapter 12) consists of implementing wind-farm-level control strategies to achieve an overall optimal performance of the entire plant. Typically, the strategies employed attempt to achieve maximum annual energy production (AEP), but more advanced objectives can include load mitigation, or real-time adaptation to the energy market. To achieve such objectives, the wind farm controller (or "supercontroller") instructs the controller of each turbine to follow a given strategy and operate at a given operating point. The supercontroller will typically ask some turbines to "derate", which means that they will operate at a suboptimal point. These turbines will produce less power, operate at lower axial induction, undergo lower thrust and lower loads. The benefit of such strategy is that a turbine downstream of a derated turbine can produce more energy since the wake deficit from the upstream turbine is not as pronounced (due to the reduced thrust). Another tool available consists of changing the yaw angle of a given turbine. This will deflect its wake away from the downstream turbine and potentially increase the overall power production of the plant. An example of optimization of a wind farm layout in conjunction with yaw-based control is given in the study of Gebraad *et al.* (2017). In this study, AEP gains of the order of 5% are obtained by optimizing the layout of a wind farm and implementing a yaw-steering strategy.

9.5 Design, Implementation and Challenges of Dynamic Control

This section elaborates on the concept of dynamic control introduced in Section 9.2 and 9.3. The section presents the dynamic control system design process, examples of dynamic control system design issues specific to wind turbine applications, and how the dynamic control systems are implemented.

9.5.1 Design of a Dynamic Control System

9.5.1.1 Classic Control System Design Methodology

The classic control system design process, as described in Grimble *et al.* (1990) and De LaSalle *et al.* (1990) involves the development of a mathematical model of the machine and a linearization of the model. The controller is then designed iteratively based on the linear model such that it meets the desired specifications which are tested with various simulation studies. The different steps are illustrated in Figure 27.

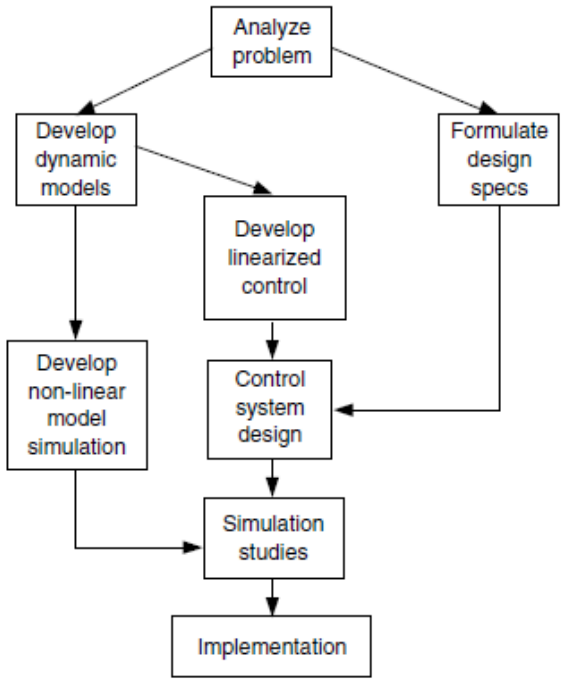

Figure 27 Control system design methodology (Grimble et al., 1990). Reproduced by permission of the Institution of Mechanical Engineers

9.5.1.2 Other Control Design Approaches

Other control design approaches that build on or deviate from classical linear system design include adaptive control, optimal control, search algorithms, and quantitative feedback robust design (see De LaSalle *et al.*, 1990; Di Steffano *et al.*, 1967; Horowitz, 1993; Munteanu *et al.*, 2008, Gambier, 2022).

Adaptive Control

The dynamic behavior of a wind turbine is highly dependent on wind speed due to the nonlinear relationship between wind speed, turbine torque, and pitch angle. System parameter variations can be accommodated by designing a controller for minimum sensitivity to changes in these parameters. Adaptive control schemes continuously measure the value of system parameters and then change the control system, adapting to the environment and potential changes in the system. As an example, an adaptive controller may vary the optimal tip-speed ratio and power coefficient instead of assuming these values to be constant as presented in Section 9.3.3. This is the approach for instance presented in Johnson (2004).

Optimal Control

Optimal design is a time domain approach in which variances in the system output (for example, loads) are balanced against variances in the input signal (for example, pitch action). . Optimal control theory formulates the control problem in terms of a performance index. The performance index is often a function of the error between the commanded and actual system responses. Sophisticated mathematical techniques are then used to determine values of design parameters to

maximize or minimize the value of the performance index. Optimal control algorithms often need a measurement of the various system state variables or a 'state estimator,' an algorithm to estimate unmeasured variables based on a machine model. A typical state estimator is a Kalman filter algorithm (see, e.g., Zarchan and Musoff, 2015).

Search Algorithms

Search algorithms can also be used to control wind turbines. These algorithms might constantly change the rotor speed in an attempt to maximize measured rotor power. If a speed reduction resulted in decreased power then the controller would slightly increase the speed. In this manner the rotor speed could be kept near the maximum power coefficient as the wind speed changed. The controller would not need to use a machine model and would, thus, be immune to changes in operation due to dirty blades, local air flow effects, or incorrectly pitched blades.

Quantitative Feedback Robust Control

Quantitative Feedback Theory (Horowitz, 1993) is a frequency domain approach for designing robust controllers for systems with uncertain dynamics. It provides methods for designing a closed-loop system with specific performance and stability criteria for systems within a defined range of operating parameters. It can ensure that one controller design will perform well for a system with a range of dynamic properties.

9.5.1.3 Wind Turbine System Models

System models used for control system design are often mathematical models based on the principles of physics. This was the approach illustrated in Section 9.2.5. When such models cannot be developed, an experimental approach termed 'system identification' can be used. The two approaches are presented below.

Models Based on Physical Principles

As discussed previously, dynamic models are used to understand, analyze, and characterize system dynamics for control system design. The models consist of one or more differential equations describing system operation. These differential equations are usually written in one of two forms: the transfer function representation (for linear models) or a state-space representation (linear or nonlinear models). The transfer function representation involves the use of Laplace transforms (as in Section 9.2.5.5) and characterizes the system in the frequency domain, while the state-space representation characterizes the system in the time domain. For a linear system, these representations are interchangeable and the choice of approach depends on the degree of complexity of the system and the analytical tools available to the system designer.

The results of control system design are only as good as the model used to describe the system. A control system based on a model that ignores critical dynamics of any part of the machine can result in catastrophic failure. However, an excessively detailed model adds complexity and cost to the analysis and may require certain input parameters that are unknown. If a nonlinear system has

been linearized for control system design, simulations of system behavior over a wide range of nonlinear operation should be carried out to check operation of the full controlled system.

System Identification

In cases where models for disturbances or for complicated systems cannot easily be determined, the experimental approach of system identification can be used (see Ljung, 1999, Franklin et al., 2022). System identification involves measuring the system output, given a controlled input signal or measurements of the system inputs. Simpler approaches to system identification require sinusoidal or impulsive inputs. Other approaches can use any input, but may require increased computational capability to determine the system model. In order to correctly identify the dynamics of a system, the input signal should be designed to excite all the modes of the system sufficiently to provide measurable outputs.

9.5.2 Summary of Control Issues in Wind Turbine Design

Wind turbines present a number of unique challenges for a control system designer (see De LaSalle *et al.*, 1990; Bianchi *et al.*, 2007; Munteanu *et al.*, 2008, Gambier, 2022). Conventional power generation plants have an easily controllable source of energy and are subject to only small disturbances from the grid. In contrast, the energy source for a wind turbine is subject to large rapid fluctuations, resulting in large transient loads in the system. The consequences of these large fluctuations and other aspects of wind turbines introduce unique issues in control system design for wind turbines:

- The penalty for a poorly regulated wind turbine is higher structural loads and reduced lifetime of the components.
- As mentioned in 9.4.3, wind turbine system consists of numerous lightly damped structures that are excited by the external environment and by forcing functions at the frequency of the rotor rotation and its harmonics. The control system needs to be designed to avoid resonance conditions (see Section 9.2.5.) and avoid exciting the system with its control action.
- The aerodynamics are highly nonlinear. This results in significantly different dynamic descriptions of turbine behavior at different operating conditions. These differences may require the use of nonlinear controllers or different control laws for different wind regimes.
- Transitions under dynamic operation from one control law or algorithm to another require careful design (See section 9.3.5).
- The control goal is not only the reduction of transient loads, but also of fatigue loads, caused by the load fluctuations about the mean load.
- Reliable torque and rotor speed measurements for feedback are often difficult to obtain.
- Adequate reduced-order models are often difficult to obtain or establish. Nonlinearities in the system can result in behavior that deviates from that of a simple model (see Novak *et al.*, 1995).

9.5.3 Dynamic Control System Implementation

Dynamic control can be implemented as mechanical systems, analog electrical circuits, digital computers, or in combinations of these.

9.5.3.1 Mechanical Control Systems

Hardware dynamic control systems use linkages, springs, and weights to actuate system outputs in response to some input. Two examples of hardware control systems are tail vanes to orient wind

turbines into the wind and pitch mechanisms (for small wind turbines) that vary blade pitch on the basis of aerodynamic forces or rotor speed.

9.5.3.2 Analog Electrical Circuit Control Systems

Analog electrical circuits are often used as distributed controllers in a larger control network. Once a control algorithm has been developed and tested it can be hardwired into circuit boards that are robust and easy to manufacture. One disadvantage of using analog circuits is that changes in the control algorithm can only be made by changing the hardware.

9.5.3.3 Digital Control Systems

Modern dynamic control systems are implemented in digital controllers (e.g. computers). Digital control algorithms are relatively easy to upgrade and allow for easy implementation of nonlinear control approaches.

Digital control systems, as illustrated in Figure 28, may need to communicate with analog sensors or actuators via analog-to-digital (A/D) converters and digital-to-analog (D/A) converters (see Astrom and Wittenmark, (1996).

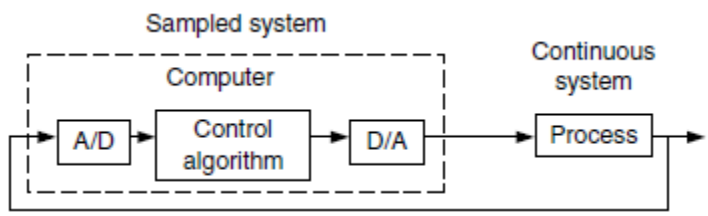

Figure 28 Schematic of computer-controlled system; A/D, analog-to-digital converter; D/A, digital-to-analog converter

Digital control systems are not continuous, but rather are sampled. Sampling gives rise to a number of issues specific to digital control systems. The sampling rate, controlled by the system clock, affects (1) the frequency content of processed information, (2) the design of control system components, and (3) system stability.

The effect can be illustrated by considering a sinusoidal signal, $\sin(2\pi ft)$ where f is the frequency of the sinusoid and t is the time. If this signal is sampled at a frequency f, then the nth sample is sampled at time $t_n = n/f + t_0$ for some starting time t_0 and for integer, n, the value of each sample, s_n, is then:

49 $$s_n = sin[2\pi f(n/f + t_0)] = sin(2\pi n + 2\pi f\ t_0) = sin(2\pi f t_0)$$

But $\sin(2\pi ft_0)$ is a constant. Thus, sampling the signal at the frequency of the signal yields no information at all about fluctuations at that frequency. In fact, in a system that samples information at a frequency f, there will be no useful information at frequencies above $f_{Ny} = f/2$, referred to as the Nyquist frequency. Furthermore, unless the input signal is filtered with a cut-off frequency below f_{Ny}, then the high-frequency information in the signal will distort the desired lower frequency information.

Sampling rate also affects the design of the control system. Digital control system dynamics are a function of the sampling rate. Thus, the sampling rate affects the subsequent control system design and operation, including the determination of the values of constants in the controller and the final system damping ratio, system natural frequency, etc. Because of this, changes in sampling rate can also turn a stable system into an unstable one. Stability can be a complicated issue, but, in

general, a closed-loop digital control system will become unstable if the sampling rate is slowed down too much.

9.6 Supervisory Control

This section provides an introduction to the wind turbine supervisory control system. This system manages safe, automatic operation of the turbine, identifying problems and activating safety systems. The supervisory control system switches between the various operating states of the turbine (ready for operation, freewheelinh, startup, power production, shutdown, etc.), performs continuous fault diagnosis and safely shuts down the turbine when needed.

9.6.1 Operating States

The main operating statesof a wind turbine are illustrated in Figure 29. The turbine may remain in some operating states for long periods of time, depending on the wind and operating conditions. These states are designated as stationary states. Other operating states may only be transitional that are entered during changes from one stationary operating state to another.

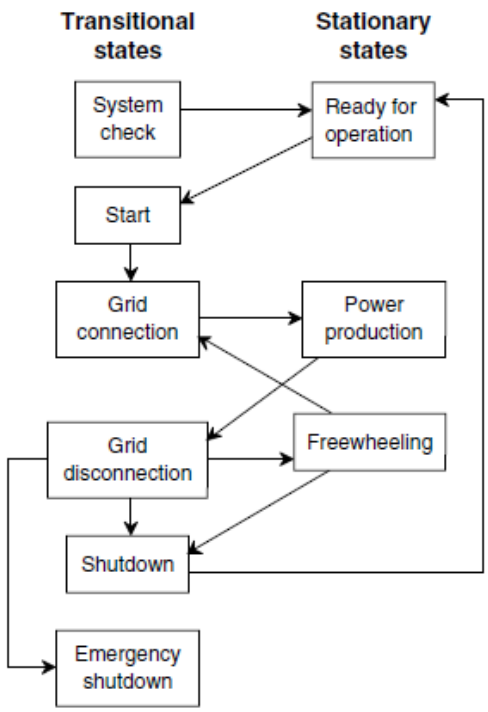

Figure 29 Typical turbine operating states

9.6.2 Fault and Component Health Diagnosis

The continuous fault diagnosis capabilities of the supervisory controller must include monitoring for component failures, including sensor failures, operation beyond safe operating limits, grid failure or grid problems, and other undesirable operating conditions.

Component failures may be detected directly or indirectly. For example, the failure of a coupling between the generator and the gearbox could be directly detected if the generator and

rotor speeds are known and do not correspond to each other. Such a failure could also be indirectly detected by noting that the rotor speed is increasing or is too high.

While the most robust and accurate sensors that can be afforded should be chosen for a wind turbine, sensor failures can also occur.

Fault diagnosis and component health diagnosis using digital twins technologies (combining multiple sensors, physics-based models, machine learning and virtual sensing) is an active area of research as it can enable condition-based maintenance and lead to significant savings on operation and maintenance costs. See e.g. Branlard *et al.* (2020).

9.6.3 Fail-safe and Fault-tolerant Systems

Wind turbine control systems rely on: (1) power, (2) control logic, and (3) sensors and actuators. The control system must include fail-safe systems in case any of these elements fail. These fail-safe systems must safely shut down the turbine in cases of grid loss, rotor over-speed, excessive vibration, and other emergency situations. On the other hand, as wind turbines become more complex, shutdown due to failures of non-essential sensors, or non-destructive damage of a component, can result in unnecessary downtimes, and therefore, loss of income. Fault-tolerant control system, that allows the turbine to continue to operate (potentially at lower rating) until maintenance is performed is therefore an active area of research.

9.7 References

Andersson, L.E., Anaya-Lara, O., Tande, J.O., Merz, K.O., Imsland, L. (2021) IET Renewable Power Generation, **15,** (10), 2085-----2108.

Astrom, K. J., Wittenmark, B. (1996) *Computer Controlled Systems, 3rd Ed.* Prentice-Hall, Englewood Cliffs, NJ.

Abbas, N. J., Zalkind, D. S., Pao, L., Wright, A. (2022) A Reference Open-Source Controller for Fixed and Floating Offshore Wind Turbines, *Wind Energy Science,* 7, 53-73, doi:10.5194/wes-7-53-2022

Barlas T., van Kuik, G. (2007) State of the Art and Prospectives of Smart Rotor Control for Wind Turbines, *Journal of Physics: Conference Series*. DOI: 10.1088/1742-6596/75/1/012080

Bianchi, F. D., de Battista, H., Mantz, R. J. (2007) *Wind Turbine Control Systems*, Spring-Verlag London Limited, London.

Bossanyi, E. A. (2003) Wind Turbine Control for Load Reduction, *Wind Energy*, **6** (3), 229-244, Wiley Interscience, Hoboken, NJ.

Bossanyi, E. A., Jamieson, P. (1999) Blade pitch system modeling for wind turbines. *Proc. of the 1999 European Wind Energy Conference*, 893–896. Nice.

Branlard, E. Giardina, D., Brown, C. S .D. (2020) Augmented Kalman filter with a reduced mechanical model to estimate tower loads on a land-based wind turbine: a step towards digital-twin simulations. Wind Energy Science, 5, 3. https://doi.org/10.5194/wes-5-1155-2020

Brodersen, M. L., Bjørke, A.-S., and Høgsberg, J. (2017) Active tuned mass damper for damping of offshore wind turbine vibrations. *Wind Energ.*, 20: 783– 796. doi: 10.1002/we.2063.

Colnaraghi, F., Kuo, B.C., (2017) *Automatic Control Systems*, *10th Ed*. John Wiley & Sons, Inc., New York.

De LaSalle, S.A., Reardon, D., Leithead, W.E., Grimble, M.J. (1990) Review of wind turbine control. *Int. Journal of Control* **52** (6),1295–1310.

Di Steffano, J. J., Stubberud, A.R., Williams, I.J. (1967) *Theory and Problems of Feedback and Control Systems*. McGraw-Hill, New York.

Franklin, G., Powell, J.D, Workman, M.L. (2022). Digital Control of Dynamic Systems-Third Edition. Ellis-Kagle Press. ISBN: 0-9791226-3-5

Gambier, A. (2022) *Control of Large Wind Energy Systems*. Springer, Switzerland.

Garcia-Sanz, M., Houpis, C. H. (2012) Wind Energy Systems: Control Engineering Design. United, *Taylor & Francis*, United Kingdom

Gasch, R., Twele, J. (2002) *Wind Power Plants*, James and James, London.

Gebraad P, Thomas, J. J., Ning, A., Fleming P., Dykes, K. (2016) Maximization of the annual energy production of wind power plants by optimization of layout and yaw-based wake control. *Wind Energy*. 10.1002/we.1993

Geyler, M., Caselitz, P. (2007) Individual blade pitch control design for load reduction on large wind turbines, *Scientific Proceedings, 2007 European Wind Energy Conference*, 82-86. Milan.

Grimble, M. J., De LaSalle, S. A., Reardon, D., Leithead, W. E. (1990) A lay guide to control systems and their application to wind turbines. *Proc. of the 12th British Wind Energy Assoc. Conference*, 69–76, Mechanical Engineering Publications, London.

Ha, K., Truong, H.V.A., Dang, T.D. *et al.* (2021) Recent Control Technologies for Floating Offshore Wind Energy System: A Review. *Int. J. of Precis. Eng. and Manuf.-Green Tech.* **8**, 281–30. https://doi.org/10.1007/s40684-020-00269-5

Hand, M.M., Balas, M.J. (2007) Blade load mitigation control design for a wind turbine operating in the path of vortices. *Wind Energy* **10** (4) 339-355. Wiley Interscience, Hoboken, NJ.

Hand, M.M. Robinson, M.C., Balas, M.J. (2006) Wind turbine response to parameter variation of analytic inflow vortices. *Wind Energy*, **9** (3), 267-280, Wiley Interscience, Hoboken, NJ.

Hansen, A. D., Bindner, H. Rebsdorf, A. (1999) Improving transition between power optimization and power limitation of variable speed/variable pitch wind turbines. *Proc. of the 1999 European Wind Energy Conference*, 889–892. Nice.

Hansen, M.H., Hansen, A., Larsen, T.J., Oye, S., Sorensen, F., Fuglsand, P. (2005) Control Design for a pitch-regulated variable speed wind turbine, Riso Report Ris0-R-1500(EN).

Horowitz, I. M. (1993) *Quantitative Feedback Design Theory*, Vol. 1, QFT Publications, Boulder, CO.

Johnson K. (2004) Adaptive Torque Control of Variable Speed Wind Turbines. NREL TP 500-36265.

Luo, N., Vidal, Y., Acho, L. (2014) *Wind Turbine Control and Monitoring.* Springer, Switzerland.

Ljung, L. (1999) *System Identification – Theory for the User*. Prentice-Hall, Upper Saddle River NJ.

Munteanu, I., Bratcu, A.I., Cutululis, N. Changa, E. (2008) *Optimal Control of Wind Energy Systems*, Spring-Verlag London Limited, London.

Nise N. S. (2019) *Control System Engineering, 8--th Ed.* John Wiley & Sons, Inc., New York.,.

Novak, P., Ekelund, T., Jovik, I., Schmidtbauer, B. (1995) Modeling and control of variable-speed wind-turbine drive-system dynamics. *IEEE Control Systems*. **15** (4), 28–38.

Pao, L. E., Johnson, K. E. (2011) Control of Wind Turbines: approaches, challenges and recent developments. *IEEE Control Systems Magazine*, **31** (2), 44-62, doi: 10.1109/MCS.2010.939962.ind Turbine Control

Scholbrock, A., Fleming, P., Schlipf, D., Wright, A., Johnson, K., Wang, N. Lidar-enhanced wind turbine control: Past, present, and future, *2016 American Control Conference (ACC)*, Boston, MA, USA, 2016, pp. 1399-1406, doi: 10.1109/ACC.2016.7525113.

Stewart, G. and Lackner, M. (2013) "Offshore Wind Turbine Load Reduction Employing Optimal Passive Tuned Mass Damping Systems," IEEE Transactions on Control Systems Technology, Vol. 21, no. 4, pp. 1090-1104

Wolfram (2023), Laplace Transform, https://www.wolframalpha.com/input?i=laplace+transform

Zarchan, P. and Musoff, H.: Fundamentals of Kalman filtering : a practical approach, Fourth Edition, AIAA, Progress in astronautics and 732 aeronautics, 2015

Active control, 3
Actuator, 7
Adaptive control, 40
Analog electrical circuit, 42
Analog-to-digital, 42
Anemometer, 6
Angle of attack, 19
Bias, 37
Block diagram, 11
Closed-loop control, 11, 14, 28
Collective pitch, 19, 36
Component failure, 44
Component health diagnosis, 44
Constant-speed, 35
Contingency reserve, 37
Control authority, 8
Control objectives, 6
Control system design, 39
C_P-λ curve, 9
Cut-in wind speed, 18
Cut-out wind speed, 19
Cyclic pitch, 36
Damper, 35
Damping, 28, 35
Derivative control, 15
Differential equation, 11
Digital control, 42
Digital twin, 44
Digital-to-analog, 42
Distributed control, 36
Disturbance, 11, 13
Downregulation, 37
Drivetrain
  equation of motion, 20
Dynamic control, 5
Dynamic inflow, 22
Efficiency
  drivetrain, 26
Fail-safe system, 44
Fault diagnosis, 44
Fault-tolerant control, 45
Feedback, 6, 12
Filtering, 37
Fixed-pitch, 3
Flap, 36
Floating wind turbine
  control, 38
Freewheel, 18, 43
Frequency control, 37
Frequency response, 37
Gain scheduling, 29, 30
Gear ratio, 26
Generator inertia, 20
Generator speed
  minimum, 18, 34
Generator torque, 20, 21
Generator torque control, 8, 19, 24
Grid, 37
Gust, 34
Gyroscopic load, 9
Hardware dynamic control, 42
Imbalance, 34
Individual pitch control, 8, 36
Integral control, 15
Kalman filter, 7, 40
Laplace transform, 13
Lidar
  feedforward control, 38
Linear system, 11
Linearization, 27, 29
Load mitigation, 6, 37
Low-speed-shaft, 20
Microtab, 36
Model Based Control, 41
Natural frequency, 16
Noise, 6
NREL 5-MW
  Cp-lambda curve, 9
  Operating conditions, 17
  Power curve, 4
Nyquist frequency, 43
Open-loop control, 11, 12
Operating conditions, 17
Operating state, 43
Operational control, 3
Optimal control, 40
Passive control, 3
Peak shaving, 33
PI-control, 24
PID-control, 15
Pitch angle
  optimal, 9, 21

Pitch control, 8, 19, 24
Pitch-regulated turbine, 3
Pitch-to-feather, 19, 25
Pitch-to-stall, 19
Plasma actuator, 37
Platform pitch, 38
Power coefficient, 9
  maximum, 9
Power curve, 3, 17
Power quality, 6
Power regulation, 6
Proportional control, 15
Quantitative feedback, 40
Rated power, 19
Rated wind speed, 19
Region
  control, 4, 17
  matching, 31
  Region 1, 18
  Region 1½, 18
  Region 2, 18, 21
  Region 2½, 19
  Region 3, 19, 24
Resonance, 17, 34, 42
Rotor inertia, 20
Sampling, 43
Sampling rate, 43
SCADA, 2
Search algorithm, 40
Sensor, 6
Sensor failure, 44
Servo motor, 11
Shear, 34
Shutdown, 43
Signal processing, 38
Smart rotor, 36
Speed regulation, 6
Stability
  control, 16
Stall, 25
Stall-regulated turbine, 3
Standstill, 36
State estimator, 40
State-space, 11, 41
Steady state, 11
Stiffness, 28
Supercontroller, 38
Supervisory control, 2
Switch, 7
System identification, 41
Thrust shaving, 33
Tip-brake, 3
Tip-speed ratio, 9
  constant, 22
  optimal, 9, 18, 21
Torque control, 8
Tower frequency, 34
Tower shadow, 34
Transfer function, 11, 13, 41
Tuned liquid column damper, 35
Tuned mass damper, 35
Turbulence, 34
Variable-speed turbine, 4
Vibration
  control, 34
  drivetrain, 35
  torsional, 35
  tower, 35
Wind farm control, 2, 38
Yaw control, 8
Yaw-steering, 39